AEROMIG C 300 / 400 PULSE
AEROPROCESS P 250 / 270 / 300 / 320 / 400 PULSE
AEROPROCESS C 250 / 270 / 300 / 320 / 400 PULSE
AEROPROCESS CW 320 / 400 PULSE
AEROPROCESS DV 320 / 400 PULSE
AEROPROCESS DVW 320 / 400 / 500 PULSE
AEROPROCESS DV DUO 320 / 400 PULSE
AEROPROCESS DVW DUO 320 / 400 PULSE
AEROPROCESS C TRIO 320 / 400 PULSE

INSTRUCTION MANUAL

INSTRUCTIONS FOR USE AND MAINTENANCE
READ THIS MANUAL BEFORE STARTING THE EQUIPMENT

SOLTER WELDING S.L. **MI03273-04 English 09/2026**

INDEX

INTRODUCTION 3
SAFETY AND PROTECTION 3
MAINS CONNECTION 4
GENERAL DESCRIPTIONS 5
DESCRIPTION OF EQUIPMENT ELEMENTS 9
COMMISSIONING MODELS C / CW - 250 / 270 / 300 / 320 / 400 11
COMMISSIONING MODELS P 250 / 270 / 300 / 320 / 400 11
COMMISSIONING OF DV / DVW MODELS 320 / 400 / 500 12
WaaS WELDING SERVICES 14
CONNECTION VIA ANDROID APPLICATION - WaaS Connect 14
CONNECTION VIA LOCAL WiFi ACCESS POINT 15
CONTROL PANEL 18
OPERATING MODE 19
ADJUSTMENT LOCK 23
DATA INITIALIZATION 23
MIG PROGRAM SELECTION 23
MIG WELDING OPERATION 27
GAS AND FEEDING MATERIAL CONSUMPTION 30
MMA WELDING OPERATION 31
TIG WELDING OPERATION 32
AEROFEED WIRE FEEDER Wi 35
COOLING UNIT 37
ANOMALIES AND DEFECTS 38
MAINTENANCE INSTRUCTIONS 41
ECODESIGN AND SUSTAINABILITY 42
ELECTRICAL DIAGRAMS 44
SOLTER TECHNICAL SUPPORT 69
WARRANTY INFORMATION 69
DECLARATION OF CONFORMITY 70

APPENDICES - PARTS LISTS AND SPARE PARTS

APPENDICES - ELECTRICAL DIAGRAMS

INTRODUCTION

Thank you for choosing our brand. We hope you find your newly purchased welding equipment very useful. This instruction manual contains the information and warnings necessary for proper use and maximum operator safety. Inverter welding machines should only be operated by experienced personnel who understand the risks involved. If you have any questions or need clarification regarding this manual, please contact us. Internal manipulation of the equipment poses a significant risk of electric shock. Please refrain from any manipulation of the device (only technically trained personnel are authorized to perform this work).

The manufacturer disclaims all liability for negligent use and/or handling. This welding equipment should NOT be used to thaw pipes.

This manual must be included with and kept on the purchased equipment. It is the responsibility of those who use and repair the product to ensure that it continues to meet the requirements of the aforementioned standards.

In order to continually improve its products, Solter Soldadura reserves the right to modify technical characteristics or add new functionalities without prior notice. The device was designed and assembled in Spain.

SAFETY AND PROTECTION



ELECTRICITY

The correct operation of this equipment is guaranteed by a suitable electrical installation. Verify that the equipment's power supply voltage (V) corresponds to the mains voltage.
The ground connection (PE) must ALWAYS be connected.



People with implanted electrical devices (PACEMAKERS) should not use devices of this kind.



PERSONAL CLOTHING

The welder's entire body is exposed to potentially harmful agents, so it must be fully protected. Wear safety boots, gloves, sleeves, gaiters, and leather aprons.



BURN PROTECTION

Never touch any part of the wire or material with your bare hands once it has been welded. Avoid getting any flying particles on your skin. Do not point the torch at any part of your body.



EYE PROTECTION

Welders and their assistants must wear safety glasses equipped with filters that block harmful radiation. Special screens allow them to observe the welding area during the process.





FIRE PROTECTION

The welding process produces incandescent metal spatter that can cause fires. Do not use the machine in environments with flammable gases. Clean the work area of all combustible materials. Protect gas cylinders according to their specific requirements.



GAS CYLINDER PROTECTION

The cylinders containing protective gases have been filled to high pressures. If they are damaged in any way, they can explode. Always handle the cylinders with care and weld as far away from them as possible.**When welding tanks containing flammable materials, there is a high risk of explosion. It is recommended to have a fire extinguisher readily available.**



PROTECTION AGAINST GASES AND FUMES.

The gases and fumes produced during the welding process can be dangerous, and a number of precautions are recommended.
Use the equipment in properly ventilated areas and do not expose yourself directly to the gases.
Use a suitable filter device for breathing if ventilation is inadequate.



ELECTROMAGNETIC DISTURBANCES

Electromagnetic interference from welding equipment can interfere with the operation of sensitive devices (computers, robots, etc.). Ensure that all equipment in the welding area is resistant to electromagnetic radiation. To minimize radiation, use the shortest welding cables possible and lay them parallel to each other on the floor, if possible. Work at a distance of 100 meters or more from equipment sensitive to interference. Ensure that the welding equipment is properly grounded. If interference problems persist, the operator must take additional measures such as relocating the welding machine, using filters, or using shielded cables to ensure no interference with other equipment.



RECYCLING

In compliance with European Regulation 2012/19/EU on Waste Electrical and Electronic Equipment (WEEE), equipment at the end of its useful life must be disposed of separately to optimize the recovery and recycling of materials and thus reduce its impact on human health and the environment.
If the product in question has a battery or cell for its electrical autonomy, this must be removed before being disposed of and treated separately as a different category of waste.
For detailed information on the most appropriate way to dispose of your equipment and/or corresponding batteries, you should contact your local recycling center.

MAINS CONNECTION

Connect the welding equipment to a grounded outlet. If using extension cords, ensure they are of a suitable gauge for the equipment's power rating. The operating voltage must be 400Vac 3~ +15 -10%. Outside this voltage range, the equipment may not function.

Attention! It is mandatory that the power outlet has an earth connection.

Start the equipment by turning the switch located on the back of the power unit. During the start-up sequence, the equipment performs an internal test. If any fault is detected, the corresponding code will be displayed on the front panel. Always start or stop the equipment using the rear switch. **Do NOT plug in or unplug the equipment from the mains power supply while the unit is turned on.**

GENERAL DESCRIPTIONS

MEANING OF THE INDICATIONS ON THE NAME PLATE

EN 60974	International construction standard on welding equipment
S/N ...	Serial number
MMA	Welding with coated electrodes
TIG	Welding with non-consumable tungsten electrodes
MIG / MAG	Welding with automatic wire feeding
X	Service factor %
I1 max	Maximum absorber current
I1 eff	Effective absorbed current (considering service factor)
I2	Welding Current (A)
U2	Test voltage for welding current I2
U1	Nominal supply voltage
Uo	Open circuit welding voltage
X ph (~)	Number of connected power supply phases
50/60 Hz	Mains supplying frequency
IP XX	Degree of external protection of equipment
S	Suitable for operation in environments with increased electrical risk

CONTROL PANEL DESIGN

The control panel has been designed to make parameter changes very intuitive and quick. Not having to remember lengthy sequences to modify the equipment's parameters allows for better use of all its capabilities.

VENTILATION

The ventilation system is automatic and prevents the accumulation of dust or other contaminants on the electronic control components. However, the user should be careful to avoid generating metallic dust and other contaminants; it is recommended to blow out the ventilation openings with dry, compressed air weekly. Dust accumulation and obstruction of the ventilation openings can reduce the equipment's rated duty cycle.

AUTOMATIC DISCONNECTION AND ENERGY SAVINGS

The equipment has an automatic disconnection system for equipment protection, which is enabled when no welding is performed for 10 minutes without work, and automatically resets when welding resumes.

PROTECTION

The equipment incorporates all the necessary protections to ensure proper operation. Temperature sensors guarantee that the components always remain within their operating range. Monitoring of the supply voltage ensures that the equipment operates within the expected limits and, if these limits are exceeded, it will disconnect to prevent potential malfunctions.

TECHNICAL CHARACTERISTICS

Modelos AEROPROCESS AEP AEROMIG Models AM	AEP P 250 AEP C 250	AEP P 270 AEP C 270	AM C 300 AEP P 300 AEP C 300	AEP C 320 AEP CW 320 AEP DV 320 AEP DVW 320	AM C 400 AEP P 400 AEP C 400 AEP CW 400 AEP DV 400 AEP DVW 400	AEP DV 500 AEP DVW 500
Input voltage (U1)	3~ 400Vac +15/ -10 %	3~ 400Vac +15/ -10 %	3~ 400Vac +15/ -10 %	3~ 400Vac +15/ -10 %	3~ 400Vac +15/ -10%	3~ 400Vac +15/-10%
Maximum input current (I1 max)	15A	16A	19A	22A	33A	44A
Effective current (I1 eff)	11A	12A	13A	14A	18A	26A
MIG-MAG duty-cycle performance at 40ºC (35%)						**500A**
MIG-MAG duty-cycle performance at 40ºC (30%)					**400A**	
MIG-MAG duty-cycle performance at 40ºC (45%)				**320A**		
MIG-MAG duty-cycle performance at 40ºC (40%)			**300A**			
MIG-MAG duty-cycle performance at 40ºC (50%)	**250A**	**270A**				
MIG-MAG duty-cycle performance at 40ºC (60%)	230A	250A	270A	280A	320A	430A
MIG-MAG duty-cycle performance at 40ºC (100%)	210A	230A	250A	260A	280A	400A
Open circuit voltage	62V	62V	62V	62V	62V	67V
Power absorbed Pmax	10KVA	11KVA	13KVA	15KVA	22KVA	30KVA
Minimum mains short-circuit power S_{sc}	1.2MVA	1.4MVA	1.6MVA	1.8MVA	2.8MVA	3.6MVA
Thermal insulation	H (180º)	H (180º)	H (180º)	H (180º)	H (180º)	H (180º)
Protection Index	IP23S	IP23S	IP23S	IP23S	IP23S	IP23S
EMC Class	A	A	A	A	A	A
Energy efficiency	89%	88%	87%	86%	85%	85%
Standby power consumption	30W	30W	30W	30W	30W	30W
Power factor (THD)	0.72	0.72	0.72	0.72	0.72	0.72
Weight Model P	26.5Kg	26.5Kg	26.5Kg	26.5Kg	27.5Kg	-
Weight Model C	48Kg	48Kg	48Kg	60 Kg	62 Kg	-
Model Weight CW	-	-	-	64 Kg	66 Kg	67 Kg
Model Weight DV	-	-	-	84 Kg	84 Kg	87 Kg
DVW Model Weight	-	-	-	87 Kg	87 Kg	90 Kg
DUO Model Weight	-	-	-	84 Kg	84 Kg	87 Kg
TRIO Model Weight	-	-	-	84 Kg	84 Kg	87 Kg
Model P Dimensions	650 x 290 x 450 mm	650 x 290 x 450 mm	650 x 290 x 450 mm	650 x 290 x 450 mm	650 x 290 x 450 mm	-
Models C / CW Dimensions	915 x 460 x 840 mm	915 x 460 x 840 mm	915 x 460 x 840 mm	920 x 365 x 780 mm	920 x 365 x 780 mm	-
Models DV / DVW / DUO Dimensions	-	-	-	1030x375x1030 mm	1030x375x1030 mm	1030x375x1030 mm
Model TRIO Dimensions	-	-	-	1030x375x1280 mm	1030x375x1280 mm	1030x375x1280 mm
Standards	EN 60974	EN 60974	EN 60974	EN 60974	EN 60974	EN 60974
Waas Welding Connectivity	All **except** AeroProcess P portable versions and AeroMIG C					

Based on its Ingress Protection (IP) rating, the device is designed for outdoor use. However, it must be protected from rain while in use.

This Class A equipment is not intended for use in residential locations where electrical power is supplied by the public low-voltage grid that serves residential or domestic buildings. The equipment must be connected to a point of coupling or a supply substation dedicated to industrial areas.

This equipment complies with the IEC 61000-3-12 standard, provided that the grid's short-circuit power (Ssc) at the point of coupling is greater than or equal to the specified minimum. It is the responsibility of the installer or user to ensure that the equipment is connected only to a grid with an S_{sc} equal to or greater than that value.

DUTY CYCLE AND OVERHEATING

The duty cycle is the percentage of 10 minutes during which the unit can weld at the required power without overheating. If the unit overheats, welding power will stop. An alarm will appear on the screen indicating which internal module has overheated. The unit will automatically clear the alarm once it reaches a safe temperature. However, it is recommended to wait at least 5 minutes before resuming normal operation. To prevent overheating, reduce the set welding power and/or the length of the weld beads being made.

ATTENTION

Exceeding the equipment's rated duty cycle and continuing to operate it for an extended period (without allowing it time to cool down properly) could cause a major breakdown. **NOT** covered by the equipment warranty.

TRANSPORT AND INSTALLATION OF WELDING EQUIPMENT

The equipment must be transported in the position indicated on its packaging. Care must be taken to ensure the equipment is not subjected to any impact during transport. The equipment must be placed in a dry, well-ventilated location, away from water sources and the welding station (to prevent metal dust from entering the equipment). The equipment must be placed on a horizontal surface with a maximum tilt of 10°. The machine must be connected to an electrical panel, which must include a residual current device (RCD) and a circuit breaker. The RCD protects people from direct or indirect contact with electrical parts. The circuit breaker must be selected according to the equipment's rating plate. A circuit breaker with a slow current-to-time ratio (D-curve) is recommended to prevent false tripping.

EQUIPMENT HANDLING

To handle the power unit, always use the front and rear handles. If a transport unit is available, ensure all anchor points are properly secured. To move the equipment once it is in the transport unit, DO NOT use the top handles of the power unit; instead, move the entire unit using the securing eye bolts that must be screwed to the base of the transport unit.

USE OF ELECTRIC GENERATORS

The equipment is designed to operate with an electric generator. However, these generators must meet certain requirements. If the generator does not have sufficient power or the output voltage is outside the equipment's operating limits, it can cause arc instability and consequently, a loss of weld quality. In the worst-case scenario, it can even cause equipment damage. Do not connect multiple welding machines to the same generator. Sudden changes in load level can affect the stability of the welding arc. Depending on the set power level and maximum amperage range of your equipment, it is recommended to use generators with a constant power output equal to or greater than that indicated in the following table.

Maximum Current Range (A)	Recommended generator power (KVA)
250 A	10 KVA
270 A	11 KVA
300 A	13 KVA
320 A	15 KVA
400 A	22 KVA
500 A	30 KVA

DESCRIPTION OF EQUIPMENT ELEMENTS

AeroProcess P 250 / 270 / 300 / 320 / 400 (PULSE)

1 - Control panel
2 - MIG/MAG torch connector
3 - Torch polarity connector
4 - Positive pole connector
5 - Negative pole connector
5 - Shielding gas inlet
6 - Main switch
7 - Network connection cable
8 - Transport wing
9 - Rating plate

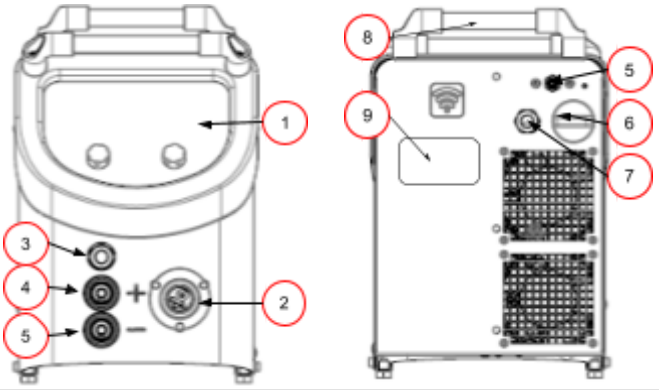

AeroProcess C 250 / 270 / 300 / 320 / 400 (PULSE)

1 - Control panel
2 - MIG/MAG torch connector
3 - Positive pole connector
4 - Negative pole connector
5 - Shielding gas inlet
6 - Main switch
7 - Network connection cable
8 - Upper gas cylinder support
9 - Lower gas cylinder support
10 - Base for transporting a gas cylinder
11 - Rating Plate

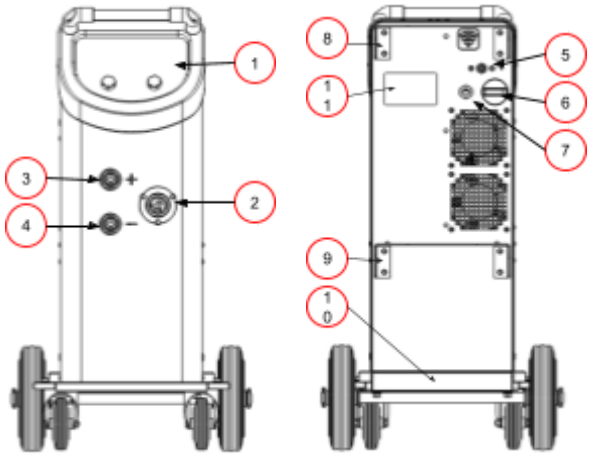

AeroMIG 300 / 400 (PULSE)

1 - Control panel
2 - MIG/MAG torch connector
3 - Negative pole connector
4 - Shielding gas inlet
5 - Main switch
6 - Network connection cable
7 - Upper gas cylinder support
8 - Lower gas cylinder support
9 - Base for transporting a gas cylinder
10 - Rating Plate

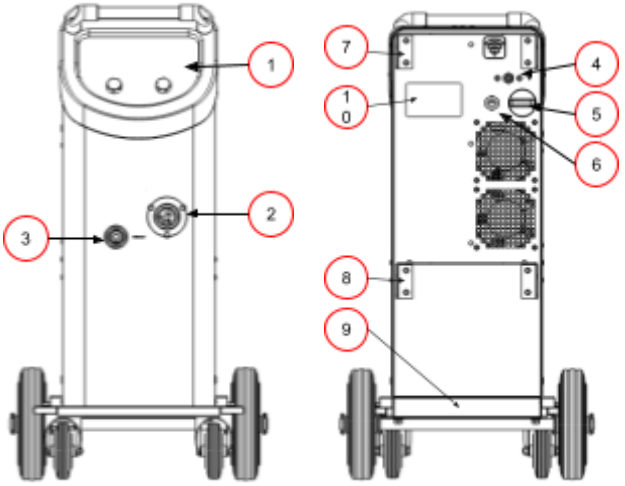

AeroProcess DV 320 / 400 / 500 (PULSE)

1 - Control panel
2 - MIG/MAG torch connector
3 - Negative pole connector
4 - Positive pole connector
5 - Shielding gas inlet
6 - Fuse (2A slow)
7 - Main switch
8 - Network connection cable
9 - Transport wing
10 - Rating Plate
11 - WiFi connection antenna
12 - Connection to winder
13 - Gas outlet to winder
14 - Control Tig
15 - Gas inlet to winder
16 - Winder power connector
17 - Power connection
18 - Pilot light

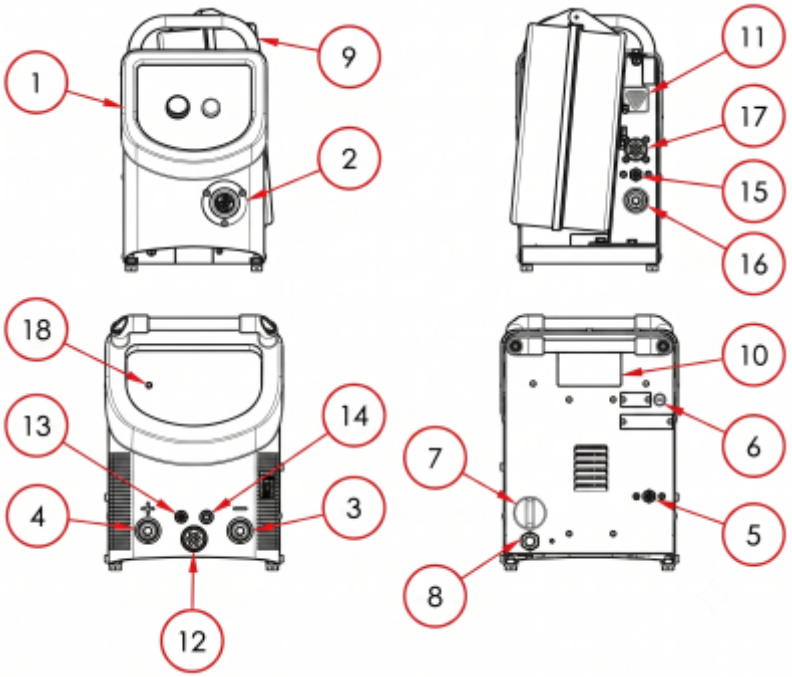

AeroProcess DVW 320 / 400 / 500 (PULSE)

1 - Control panel
2 - MIG/MAG torch connector
3 - Negative pole connector
4 - Positive pole connector
5 - Shielding gas inlet
6 - Auxiliary power fuse (2A slow)
7 - Main switch
8 - Network connection cable
9 - Transport wing
10 - Rating Plate
11 - WiFi connection antenna
12 - Connection to wire feeder
13 - Gas outlet to wire feeder
14 - Control Tig
15 - Gas inlet to winder
16 - Wire feeder power connector
17 - Power connection
18 - Pilot light
19 - Refrigerator rating plate
20 - Coolant outlet to torch
21 - Coolant return from torch
22 - Coolant outlet to wire feeder
23 - Coolant return from wire feeder
24 - Cooling system Fuse (2A slow)
25 - Coolant level indicator
26 - Coolant cap

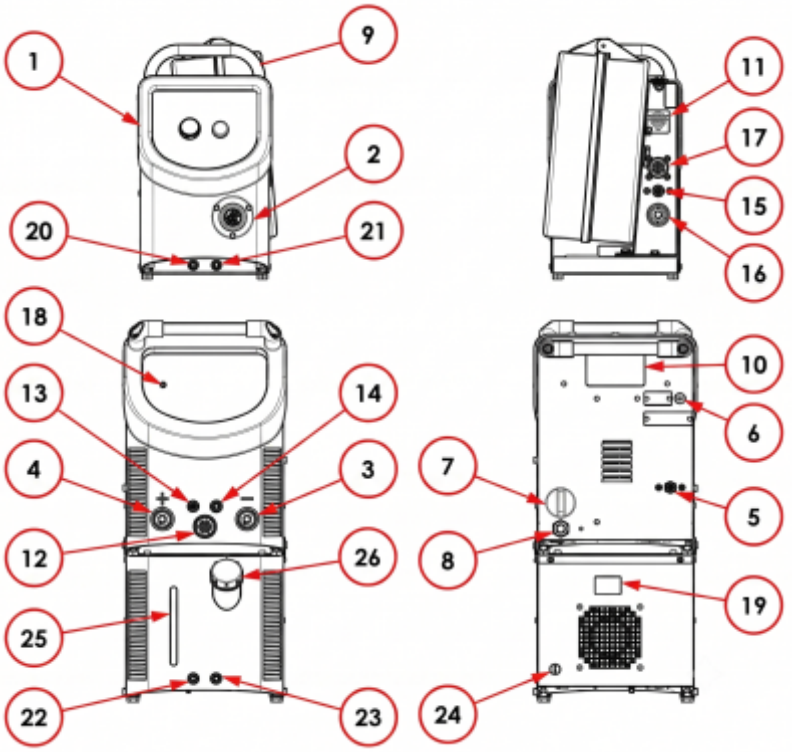

COMMISSIONING MODELS C / CW - 250 / 270 / 300 / 320 / 400

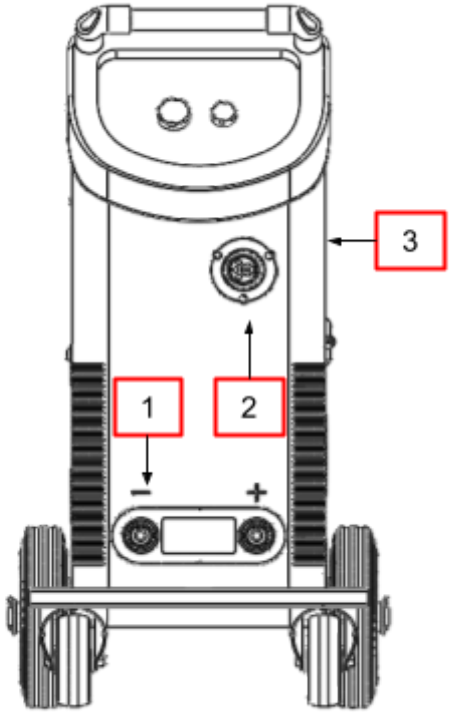

1. Connect the ground clamp as close as possible to the workpiece and connect the other end of the cable to the equipment's negative terminal (1). The contact surface with the workpiece should be as large as possible. Ensure that this surface is completely clean and free of paint and rust.

2. Connect the MIG torch to position (2), ensuring it is fully screwed into the Euro connector. Make sure the torch is suitable for the material, current levels, and duty cycle required for your application. Solter offers a variety of torches to meet the needs of each customer.

3. Open the side door and load the wire spool you will be using. Pass the wire through the feed motor and insert 10 cm into the torch cable.

4. Connect the gas hose to the rear nozzle of the power unit and the other end of the hose to the gas cylinder's flow regulator. Ensure you are using the correct gas mixture for the material being welded. Adjust the gas flow rate to a typical value of 10 L/min. Remember to close the gas cylinder valve when the welding equipment is not in use.

5. Connect the welding equipment to a grounded outlet (it is mandatory that the power outlet has a ground connection). The mains voltage must be 400VAC +/-15% 3ph.

COMMISSIONING MODELS P 250 / 270 / 300 / 320 / 400

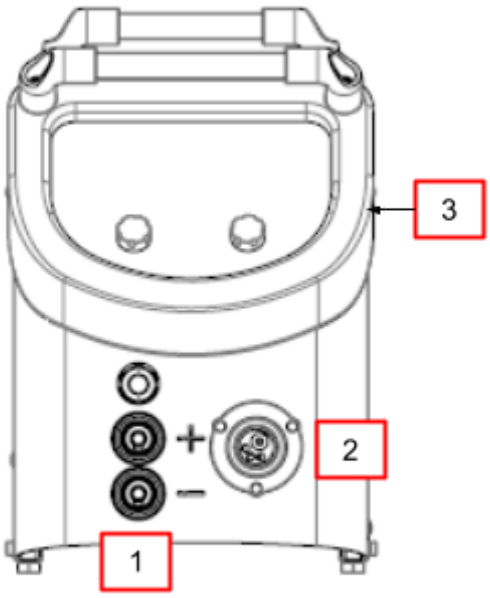

1. Connect the ground clamp as close as possible to the workpiece and connect the other end of the cable to the equipment's negative terminal (1). The contact surface with the workpiece should be as large as possible. Ensure that this surface is completely clean and free of paint and rust.

2. Connect the MIG torch in position (2), ensuring it is fully screwed into the Euro connector. Make sure the torch is suitable for the material, current levels, and duty cycle required for your application. Solter offers a variety of torches to meet the needs of each customer.

3. Open the side door and load the wire spool you will be using. Pass the wire through the feed motor and insert 10 cm into the torch cable.

4. Connect the gas hose to the rear nozzle of the power unit and the other end of the hose to the gas cylinder's flow regulator. Ensure you are using the correct gas mixture for the material being welded. Adjust the gas flow rate to a typical value of 10 L/min. Remember to close the gas cylinder valve when the welding equipment is not in use.

5. Connect the welding equipment to a grounded outlet (it is mandatory that the power outlet has a ground connection). The mains voltage must be 400VAC +/-15% 3ph.

COMMISSIONING OF DV / DVW MODELS 320 / 400 / 500

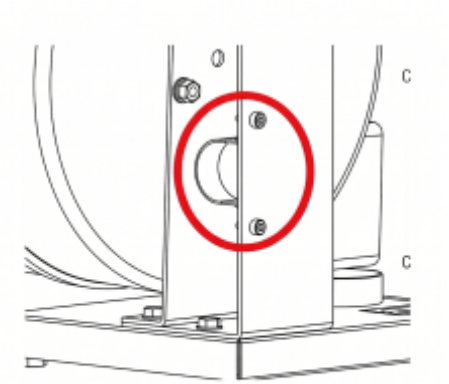

1. Unscrew the metal clamp located behind the plastic spool holder. The interconnecting cable between the power unit and the AEROFEED unit must pass through this clamp, **which secures it** and keeps the connection aligned.



2. Make all connections between the equipment and the reel. All power, control, and gas connections must be securely fastened between the reel and the power unit.

In AeroProcess equipment, the polarity must be selected based on the type of wire to be used.

Aeroprocess DV/DVW units come standard with a 1.7-meter cable (73362). The same cable is available in 5- or 10-meter lengths upon request. The same connections are also available with torch cooling capabilities. See the summary table below.

POSITIVE CONNECTION

This type of connection is the most common for different types of wire. The power cable connects to the positive terminal and the ground clamp to the negative terminal.

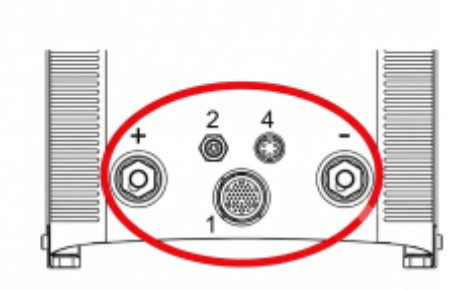

NEGATIVE CONNECTION

This type of connection is uncommon. It is used for gasless or basic gas-filled flux-cored wire. The power cable connects to the negative terminal and the ground clamp to the positive terminal. It is recommended to consult the wire manufacturer's instructions, as they may vary.

3. The ground clamp should be connected as close as possible to the piece to be welded, and the other end of the cable should be connected to the equipment (in the desired position according to polarity). The contact surface with the workpiece must be the largest possible. Make sure that the surface is completely clean and free of paint and rust.

4. Connect the MIG torch in its position, ensuring it is fully screwed into the Euro connector. Make sure the torch you are using is appropriate for the material, cooling system, current levels, and duty cycle required for each application. Solter offers a variety of torches to suit every customer's needs.

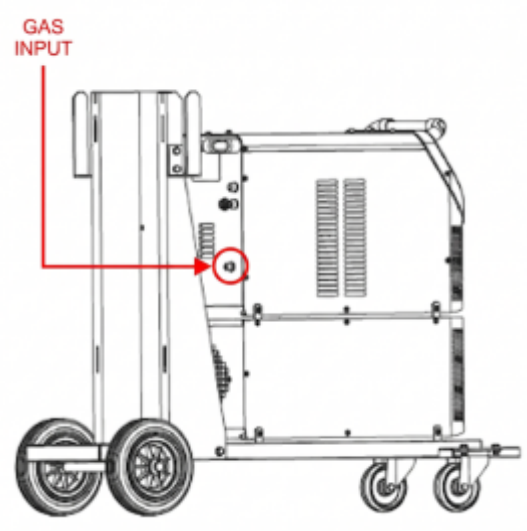

5. Connect the gas hose to the rear nozzle of the power unit and the other end of the hose to the flow regulator on the gas cylinder. Ensure you are using the correct gas mixture for the material being welded. Set the gas flow rate to a typical value of 8–10 L/min. An incorrect flow rate setting can result in weld defects. Remember to close the gas cylinder valve after welding is complete.

ATTENTION

Do not connect the gas cylinder directly to the wirefeeder, as it does not have a solenoid valve. The solenoid valve is located in the power unit, near the gas cylinder, to save gas consumption.

6. Connect the welding equipment to a socket with an earth connection (it is mandatory that the power socket has an earth connection, ground. The mains voltage must be 400Vac +/-15% 3ph. Outside of this voltage range, the equipment may malfunction. Aeroprocess equipment is supplied with a 4x4mm² power cable with a length of 4 meters without a plug. If a longer power cable is required, it can be replaced. For lengths greater than 25 meters, a cable cross-section of 6 mm² is recommended.The equipment does not require a neutral connection. The yellow-green wire (ground) must always be connected to the equipment chassis.

There are the following different connections available:

CONNECTIONS WITHOUT COOLING		COOLED CONNECTIONS	
AEROFEED CONNECTION 1.7m	73362	AEROFEED CONNECTION 1.7m DW	73365
AEROFEED CONNECTION 5.0m	73363	AEROFEED CONNECTION 5.0m DW	73366
AEROFEED CONNECTION 10.0m	73364	AEROFEED CONNECTION 10.0m DW	73367

The following table shows the cable cross-section, for lengths less than 25 meters based on the average welding amperage and duty cycle (X). This data is for reference only and may not be suitable for all applications. If the cable overheats, use a larger cable cross-section.

Welding Current (A)	**100**	**150**	**200**	**250**	**300**	**350**	**400**
Section (mm)² for X < 60%	16	25	25	35	50	50	70
Section (mm)² for X > 60%	16	25	35	50	70	70	90

ATTENTION

The installation or replacement of the power cable and its plug must be carried out only by qualified technical personnel.

ATTENTION

Coiled welding power cables can cause interference and defects in arc stability.
The welding cables must be completely unfolded. Avoid creating circles or loops.
This includes the ground clamp, the welding torch, and the connections to the wire feeder.

WaaS WELDING SERVICES

The Solter AeroProcess C / CW / DV / DVW range of welding equipment is compatible with the online services provided by ***WaaS Welding.*** The device has a WiFi connection through which you can connect to the internet to access online services.

The Solter AeroMIG C and AeroProcess P portable units do **NOT** have WiFi / BLE connectivity and therefore **CANNOT** access **WaaS Welding, WaaS Connect or Wi Panel services**.

Some of the platform's featured services ***WaaS Welding*** are:

- Work monitoring and recording
- Incident monitoring and recording
- Manufacturing Cost Analysis
- Advanced welding control via an application integrated into the equipment,*Welding Intelligence Panel* (**Wi Panel**).
- Welding process validation tools.
- Integrated management of all your WaaS-compatible welding equipment from a single environment.
- Sharing data and work programs between different compatible devices.
- Equipment usage management.
- Preventive and predictive maintenance management
- Work program management, locally and remotely. Ability to lock remote settings.
- Remote assistance from the Solter Soldadura technical service.
- Welding Assistant integrated into the web application, for editing Welding Specifications (WPS).

Access to https://data.waaswelding.com to learn more and register as a new user.
If you already have an account, you don't need to register again.
You can manage multiple devices from the same user account.

CONNECTION VIA ANDROID APPLICATION - WaaS Connect

This is the **preferred** connection method. Through the application ***WaaS Connect,*** You can configure the device's connection to ***WaaS Welding*** and access the web control panel (***Wi Panel***) of your device. Follow the steps described below:

1. Install the app **WaaS Connect** on an Android 8.0 or higher device.
2. Enable wireless connections (WiFi and Bluetooth) as well as location services on your device.
3. Open the app, select your preferred language, and scan for nearby devices.
4. Establish a Bluetooth connection by selecting one of the devices from the list of devices within range.
5. The first time you connect a device, you will need to configure the internet connection and access to WaaS Welding. If you do not yet have a user account, **register at** https://data.waaswelding.com. From a single account you can control multiple devices.
6. Enter your **WaaS Welding user key**, the **WiFi network name** and **password.**
7. If the entered data is correct, the internet connection status and the Welding WaaS servers connection status will be displayed as correct in a few moments. Additionally, access to your device's web control panel will be enabled (**Wi Panel**). Use a browser *Chrome* or *Firefox* preferably.
8. Remember that you can use the WaaS Connect app in the future to quickly access your device's web control panel (**Wi Panel**).

CONNECTION VIA LOCAL WiFi ACCESS POINT

This is an **alternative** connection method. Use this access method only if you are having trouble with your preferred method through the application.**WaaS Connect.** To configure internet access, access the web application built into the device (**Wi Panel).** Follow these steps:

1- Start the equipment and wait for it to complete the startup sequence.
2- Access your device by searching for your WiFi access point from any device. Each device has a unique network name and password, as shown in the following table:

Network name of your computer's access point	**WaaS-SN-MO-**XXXXX-XXX
WiFi access point password for the device	**MO-**XXXXX-XXX
XXXXX-XXX is the serial number assigned to your equipment. You can check it on the rating plate located on the back of the device.	

3- Once connected to the device's Wi-Fi access point, open the web application. To access it from your web browser (preferably Chrome or Firefox), enter the address http://192.168.4.1/index.html
4- Follow the steps described in the table below to connect your device to the internet and link it to your service ***WaaS Welding*** account.
5- Once your equipment's web application is configured, go to waaswelding.com and log in. Verify that your device appears in your **MAIN DASHBOARD.** You will have successfully completed the linking of your equipment to the welding services platform ***WaaS Welding***.

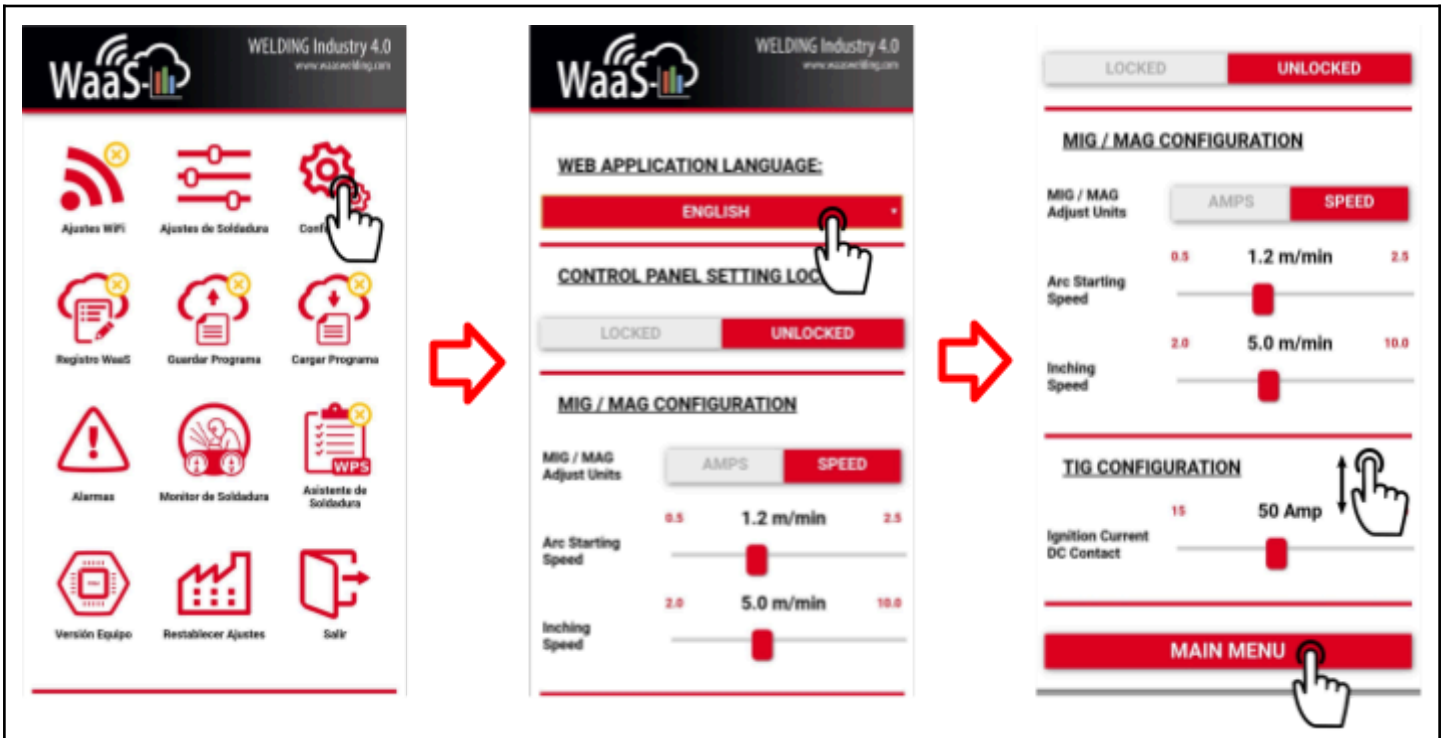

1	2	3

1. If the web application is not in your language, select the button ***Settings***.
2. Select the web application language. Your selection will be remembered for future access.
3. Scroll to the bottom of the settings page and return to the main screen by pressing the button **MAIN MENU**.







4	5	6

4. The first time you open the application, you will need to configure internet access via Wi-Fi. Without an internet connection, features that require communication with the cloud will not work and will be indicated with a **yellow cross or displayed in clear grey.** Select the WiFi Settings button.
5. Press ***SEARCH FOR AVAILABLE NETWORKS*** to scan for WiFi connections within range of your device.
6. The available WiFi networks and their signal strength are listed. Ensure the signal strength reading is stronger than -80 dBm (preferably between -30 dBm and -70 dBm). Select the desired WiFi network by tapping the "***Network Name"***.







7	8	9

7. Enter the password for the network you wish to connect to.
8. Press **CONFIRM,** The connection process will now begin. This may take approximately 10 seconds; please wait for it to complete.
9. It will return to the screen ***WiFi network settings.*** If the connection is successful, the network will be indicated in blue. Press **MAIN MENU** to return to the home screen.



10	11	12

10. The first time you set up your device's web application, the button **WiFi settings** and **WaaS Registration** will appear with a **question mark.** This indicates that you have a WiFi connection but registration to the services *Waas Welding* could not be completed. Press the button **WaaS registration**.

11. You must complete the User Password fields (1), your device's preferred alias (2) and confirm the sending of your data by clicking **TO SEND** (3). To obtain a user code, register at data.waaswelding.com.

12. If the WiFi connection and registration in the WaaS Welding services is correct, all the yellow crosses will disappear, allowing access to all the functionalities. Sometimes the connection and registration verification may take a few seconds (especially the first time they are linked), please be patient.

CONTROL PANEL

ELEMENTS
1- Screen
2- Left Pushbutton / Selector (Yellow)
3- Right Pushbutton / Selector (Blue)
4- Button to access MENU
5- Manual threading Button



Right and left pushbuttons

The function to move forward or backward in the on-screen menus depends on the icon that appears in the lower right and left corners. Follow the color guide: yellow (left button) or blue (right button).

Right and left selectors

By rotating the selector, you can choose between the different options displayed on the screen or modify values, depending on the screen type. Fields in yellow are edited with the yellow (left) selector. Fields in blue are edited with the blue (right) selector. Some screens only show one possible selection; in that case, the fields are displayed in white and can be edited with either selector.

Menu button

It provides access to the main menu, where we can select the welding material, equipment settings, adjustment lock, or read and save programs.

Thread Button

Manual threading of the initial wire through the welding torch to avoid consuming gas.

OPERATING MODE

The device allows four usage modes to adapt the settings to the user's experience and preferences.

ATTENTION
Changing the operating mode will reset the adjustment parameters to their default values.

EASY mode is ideal for users with ***no prior experience***. Adjustments are always made synergistically. Simply select power/thickness (yellow selector) and wire length (blue selector). It is compatible with all MIG transfer modes: short circuit, pulsed, tubular, and root; however, it does not allow the selection of dual-level arc transfers, which require multiple advanced adjustment parameters for proper tuning.

EASY MAIN DISPLAY	
1	Yellow left push button function, Selection of the arc transfer type for the preset material and gas type.
2	Blue right push button function, Operating mode
3	Lock function status
4	WiFi connection status
5	Welding process and torch number
6	2-Stroke / 4-Stroke Operating Mode
7	Adjust with the right selector (Blue), Wire length
8	Adjust with the left selector (Yellow), Feed speed / Material thickness
9	Selected MIG/MAG program: material, gas, wire diameter, and transfer type
10	Adjustment recommendation, if the recommended material thickness range is exceeded
11	Screen name

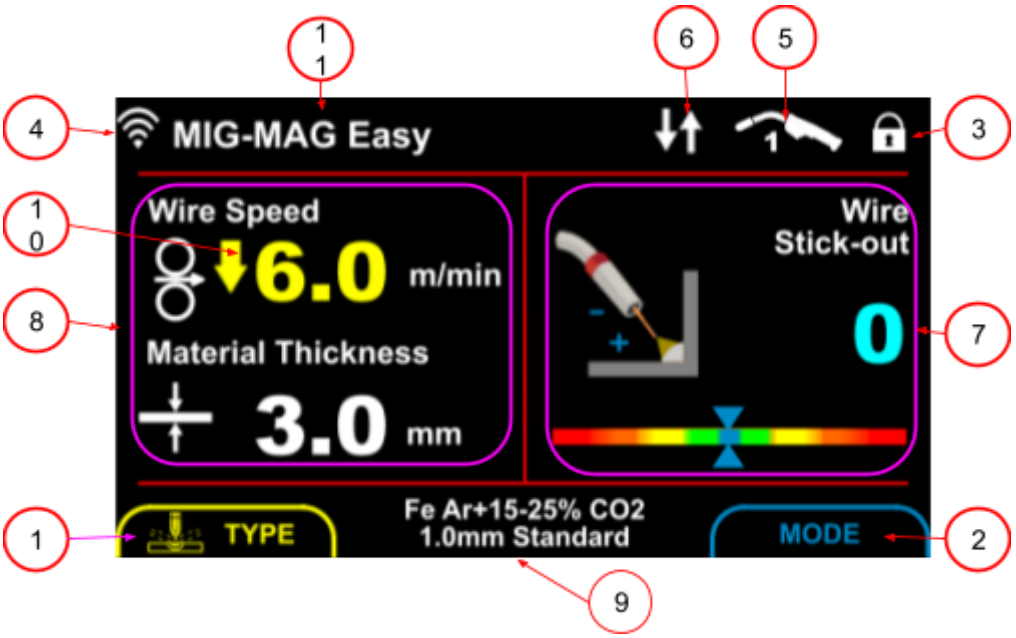

The **CLASSIC EASY** mode is ideal for users ***who have previously welded with classic transformer-based welding machines*** with power switches. In this mode, adjustments are always manual and emulate the adjustments of this type of equipment: arc power (blue selector) and wire feed speed (yellow selector). MIG transfer modes in this mode are all those compatible with classic transformer-based machines, including standard (short-circuit) and flux-cored wire feed.

CLASSIC EASY DISPLAY	
1	**Yellow left push button function, Selection of arc transfer type for the preset material and gas type.**
2	**Blue right push button function, Operating mode**
3	**Lock function status**
4	**WiFi connection status**
5	**Welding process and torch number**
6	**2-Stroke / 4-Stroke Operating Mode**
7	**Adjust with the right selector (Blue), Welding power (Arc Voltage)**
8	**Adjust with the left selector (Yellow), Feed speed (Thread length)**
9	**Selected MIG/MAG program: material, gas, wire diameter, and transfer type**
10	**Screen name**

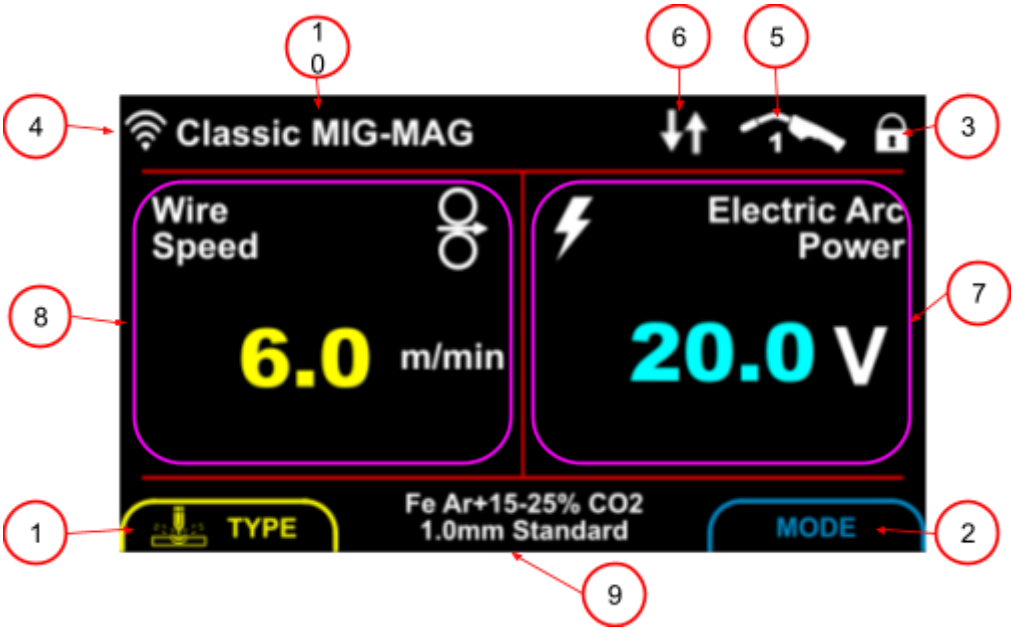

The **CLASSIC PRO** mode is ideal for users with ***extensive experience using classic transformer-based welding machines*** with power switches. In this mode, adjustments are always manual and emulate the adjustments found on these machines: arc power (blue selector) and wire feed speed (yellow selector). Inductance taps are selected using the inductance display, ranging from -10 to +10. This mode is compatible with the welding timer function for spot welding. MIG transfer modes in this mode include all those compatible with classic transformer-based machines: standard (short-circuit) and tubular.

CLASSIC PRO MAIN DISPLAY	
1	**Yellow left push button function, Selection of arc transfer type for the preset material and gas type.**
2	**Blue right push button function, Operating mode**
3	**Lock function status**
4	**WiFi connection status**
5	**Welding process and torch number**
6	**2-Stroke / 4-Stroke Operating Mode**
7	**Adjust with the right selector (Blue), Welding power (arc Voltage)**
8	**Adjust with the left selector (Yellow), Feed speed (wire length)**
9	**Selected MIG/MAG program: material, gas, wire diameter, and transfer type**
10	**Screen name**
11	**Electric Arc Inductance**

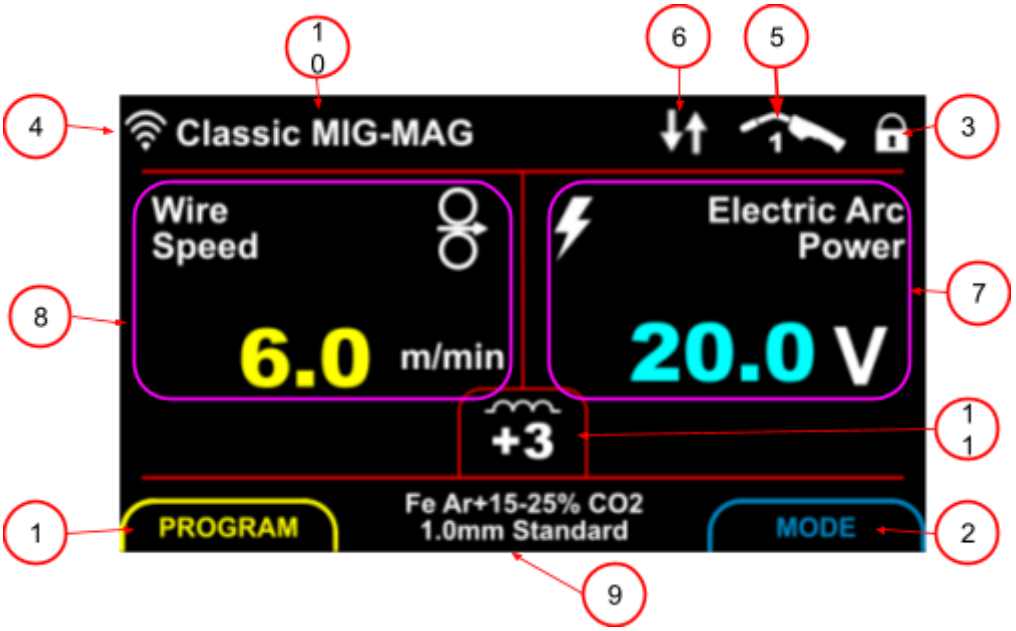

EXPERT mode allows complete configuration of welding characteristic curve parameters and access to all complementary functions to facilitate the welding process. Adjustment can be synergistic or manual. It is compatible with all MIG transfer modes, including those with dual levels, which allow alternating melting and cooling cycles for complex and/or positional welds..

EXPERT MAIN DISPLAY	
1	Yellow left push button function, Selection of arc transfer type for the preset material and gas type.
2	Blue right push button function, Operating mode
3	Lock function status
4	WiFi connection status
5	Welding process and torch number
6	2-Stroke / 4-Stroke Operating Mode
7	Spot welding mode
8	Right selector (blue) adjustment: Arc height
9	Left selector (yellow) adjustment: Wire feed rate
10	Electric Arc Inductance
11	Estimated welding amperage
12	Welding voltage for the selected arc height
13	Selected MIG/MAG program: material, gas, wire diameter, and transfer type
14	Screen name



ADJUSTMENT LOCK

To select the lock mode, you must press the key **MENU** and then enter the locking **option**. A password is requested on the lock screen. The password number is **333**, after entering it it must be validated with the blue button. Select mode **unlocked, mode lock** or **total lock**, according to the icon.

MODE LOCK is ideal for production tasks using the same type of material but requiring flexibility in adjusting the welding power level and/or arc height. In this mode, it is not possible to change advanced parameters, the operating mode, the type of material or welding program.

TOTAL LOCK is ideal for tasks that are completely repetitive with the same welding type, material, and thickness. It is not possible to edit any working parameters

The lock status icon is displayed in the upper right corner at all times. If you try to edit a parameter without permission, the password is requested. Even with the lock mode active, it is possible to consult the value of all parameters, but **NO** edit them.

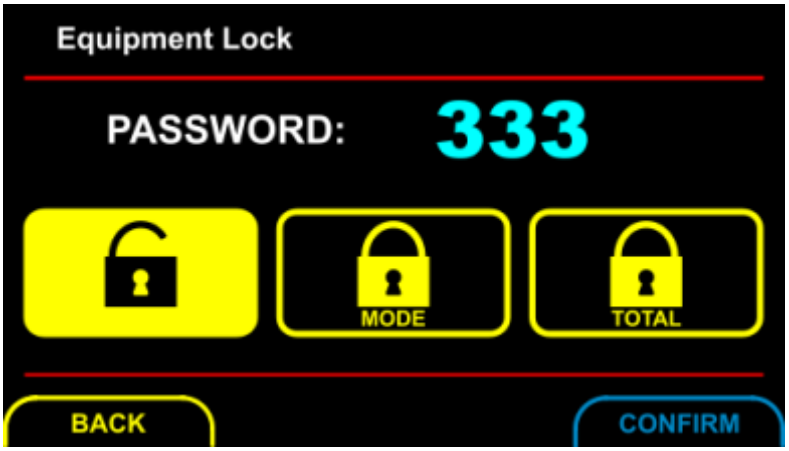

DATA INITIALIZATION

All work program data can be reset to the factory value, which will be useful to correct problems caused by unintentionally changed parameters. To proceed with initialization, we must press the key **MENU** and then enter **SETUP**. There we will see the option to **Restore** the equipment to factory settings.

MIG PROGRAM SELECTION

From the **MAIN** screen access to the **MIG/MAG programs** pressing the left yellow button. The selection process can only be done with the left (yellow) button; rotate to modify the selection and press to confirm it. The selection is guided by first selecting the material group; Below is the specific specification of the material and the shielding gas; the diameter of the wire and finally the type of arc transfer.

NOTES

When you modify the MIG program, a copy of the previous program's settings is automatically saved. These settings are fully restored when you reselect the previous MIG program. This feature is very useful for switching between two types of MIG programs, for example, standard for preliminary stitches and double-pulse for creating the final weld bead.

STANDARD MIG ARC TRANSFER TYPES

The equipment allows you to work with different standard MIG processes depending on the type of material transfer. Each type of process is briefly described below. **Standard** and the most appropriate application case for each one.

Standard MIG Transfer Type	Description
STANDARD MIG	This type of process allows us to emulate the behavior of conventional transformer MIG-MAG welding equipment. It is characterized by 3 types of material transfer depending on the power level. ***Short Circuit Arc:*** The transfer of the drop of molten material is carried out by contact when the feed wire short-circuits with the weld pool. Some projections occur, the thermal contribution is contained. ***Globular Arc.*** The drop of material begins to form at the end of the wire and finally a short circuit occurs. It presents explosive behavior with a large number of splashes, which is why it is a work range that is often avoided. ***Spray Arc:*** Drops of material melt at the end of the wire and are sent to the weld pool without the need for contact. It does not produce projections but the thermal input is very high. It is ideal for large thicknesses.
UBULAR FLUX CORED RUTILE + MIG	MIG welding with wire protected with Rutile Flux. The tubular wires increase the wetting capacity, improving the forward speed. They provide extra protection to the weld bead and allow welding without spatter. They require final cleaning to remove the surface layer of protection, however once removed the appearance of the weld is shiny.
TUBULAR FLUX CORED BASIC - MIG	MIG welding with wire protected with Basic Flux. The tubular wires increase the wetting capacity, improving the forward speed. They provide extra protection to the weld bead and allow welding without spatter. They need final cleaning to remove the surface layer.
SELF-PROTECTED GASLESS TUBULAR MIG	MIG welding with self-shielded wire without the need for shielding gas. This type of wire can be used outdoors. They require final cleaning to remove the surface layer of protection.
TUBULAR METAL CORED MIG	MIG welding with wire protected with a metal core. Metal-type tubular wires considerably increase the deposition rate and advance speed. Allows multiple passes to be applied without the need for prior stripping.

TYPES OF PULSED MIG TRANSFER

Pulsed MIG processes are only compatible with certain equipment versions **Pulsed**.
Each type of process is briefly described and their most appropriate application case for each one.

Pulsed MIG Transfer Type	Description
STANDARD PULSE MIG **FAST PULSE MIG**	This type of process is characterized by a pulsating amperage at a frequency that allows a drop of material to be created at the end of the wire of the same diameter as the wire and transferred to the weld pool. This process is done without contact, so projections are reduced to a minimum. It is possible to transfer droplets smaller than the diameter of the wire in use. In this way the welding advance speed can be increased. Select “SPS” (Fast Pulse) Pulsed transfer is especially useful for welding aluminum and stainless steels when the piece to be joined is of low-medium thickness. It can also be used for those welds that need to minimize the number of projections.
DOUBLE PULSE MIG	This process has the same characteristics as pulsed transfer, but adds the possibility of configuring two power levels that alternate at a preset interval. The two levels allow you to define a **cycle of fusion (advance)** and another cycle of **cooling (fixation)**. Alternating between two power levels helps maintain a constant rate of progress. Used on aluminum it creates a bead finish reminiscent of TIG AC/DC. The Double Pulse MIG process reduces the heat input to the welded part, reducing the possibility of causing deformations. Can assist in positional welding. However, for pieces where the position and thermal input represent a difficulty, it is recommended to use the mode **Upward Pulse MIG**.

SPECIAL MIG TRANSFER TYPES

The special MIG processes Root and Rising Pulse are only compatible with the equipment versions **Pulsed**.
Each type of process is briefly described and their most appropriate application for each one.

Special MIG Transfer Type	Description
ROOT PASS MIG	This type of process is what **allows the lowest heat input** possible. The arc works similarly to a standard short circuit transfer. However, thanks to predictive digital control, just as the drop of material is transferred to the melting bath, the amperage is reduced to a minimum. An instant later a pulse sends a drop of material, moving the wire away from the molten pool before starting a new cycle. The energy input is drastically reduced. Its notable applications are root passes, welds for very thin thicknesses, edge welds with separation, pipe welds, positional welds. In general, any welding that requires very low power. This type of process is recommended for welding copper alloy wires, **CuSi and CuAl**. The heat input is minimal to work with very thin sheets of sheet metal. **This type of process is not recommended for wide thicknesses without preparation**, since the low heat input could cause fusion defects.
UPWARD PULSE MIG	It is an evolution of the double pulse system. Like that one, it has two power levels: **melting and cooling**. In this case the fusion is carried out by pulsed arc and the cooling by standard transfer. Alternating these two types of arc allows the heat input to the piece to be significantly reduced, while providing sufficient melting capacity. As its name indicates, it is especially useful for positional welding, such as position **ascending**. When welding with this special process it is not necessary to draw a pattern with the torch on the bead, keep the torch centered on the root and advance straight with slow speed according to the set intervals. This type of welding has a better aesthetic finish, even with low alloy steels, reminiscent of a welding performed with TIG.
STANDARD ASCENDING MIG	This process has the same arc types as standard transfer, but adds the ability to configure two power levels that alternate at a preset interval. The two levels allow you to define a **cycle of fusion (advance)** and another cycle of **cooling (fixation)**. Alternating between two power levels helps maintain a constant rate of progress. The standard ascending MIG process represents an advantage by considerably reducing the heat input delivered, minimizing the possibility of causing deformations. It is especially useful for positional or tube welding.

ATTENTION

Only AeroProcess equipment in its version **PULSED** allows you to select processes **pulsed and special**.

Tubular Wires that require polarity reversal (Basic and Gasless Self-Protected),
only are compatible with the modular **AeroProcess DV and DVW**, as well as the rest of the specific ***FC versions***.

MIG WELDING OPERATION

For practically all types of materials, the connection will be with the negative on the piece and the positive on the torch, with the exception of tubular wires without gas input and basic tubular wires that will be with reverse polarity, this type of wires only are compatible with the modular AeroProcess DV and DVW, as well as the rest of the specific FC versions.

FEEDING SYSTEM

The wire feed system must be prepared with the appropriate settings for the material being used. The correct rollers for the material must be installed, and the roller pressure adjusted to the minimum setting so that the wire is fed strongly but can slip if there is an obstruction in the wire feed guide. Follow the procedure below for proper roller pressure adjustment:

1 - Press the threading button until the welding wire emerges from the torch. Do not use the torch button to thread the wire; this will waste shielding gas. Additionally, the protection system will stop the wire feed every 5 seconds if it does not detect a correct and safe welding arc start.
2 - Loosen the roller pressure to the minimum (indicated on the tensioner with the number 1).
3 - Place the torch at a 45º angle with the nozzle about 5cm from a wooden surface.
4 - Press the threading button so that the wire comes out onto the wooden surface.
5 - Increase the pressure on the rollers until the wire stops slipping and can advance. At that point, give the tension adjustment knob another half turn.
6 - If the wire always slips, even with the tensioner at maximum, it indicates a problem with the drive system. The wire guide (cable), brake adjustment, contact tip condition, and roller wear should be checked.

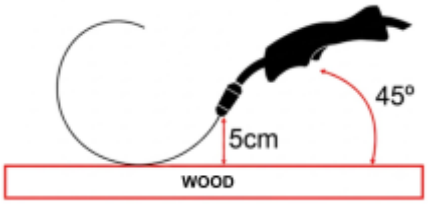

It is necessary to prepare the torch with the appropriate consumables for the material being used. This includes using a specific tip and guide for the wire gauge. For aluminum, a Teflon, polyamide, or graphite guide is required. If working with aluminum and/or pulsed arc welding processes, torches longer than three meters are NOT recommended. It is important to securely connect the torch to the wire feeder to prevent overheating or voltage drops. For aluminum welding, the exit guide from the Euro connector must be removed, and the torch's internal Teflon or graphite guide must extend to the feed rollers.

Place the wire coil in the designated holder so that, when in operation, the coil rotates clockwise. Ensure that no part of the wire coil protrudes. Use the optional Solter adapter ref.*56125* for 150mm diameter coils. The end of the wire must be filed so that it slides correctly and does not get stuck or damage the guide.

Adjust the brake so that the coil does not continue to rotate when the motor stops. Excessive brake pressure can cause the drive motor to slip, resulting in weld defects. This brake is located inside the wire coil holder. Finally, tighten the nut securely to fix the coil to the coil holder. Feed the wire through the motor rollers so that it extends 10 cm into the torch cable, and then close the roller locking mechanism.

During the welding process, the access door to the drive motor and the coil holder cover must remain closed.

ATTENTION
The components of the drive system are parts subject to wear.
To achieve optimal weld quality, maintaining the feed system is essential.

ROLLERS

ROLLERS	MATERIAL	REF. for the 2 Unit kit
0.6 - 0.8 Slot V	Fe, SS,CuSi, CuAl, NiCr	55606
1.0 - 1.2 Slot V	Fe, SS,CuSi, CuAl, NiCr	55607
1.2 - 1.6 Slot V	Fe, SS,CuSi, CuAl, NiCr	55608
1.0 - 1.2 U-slot	Al	55609
1.2 - 1.6 U-slot	Al	55610
1.0 - 1.2 Grooved Slot	Flux Core, Metal Core	55611
1.2 - 1.6 Stretched Slot	Flux Core, Metal Core	55613

SYNERGISTIC ADJUSTMENTS IN MIG MODE

The MIG welding processes on this machine are synergistic. You only need to adjust the power level (amperage/wire speed); the voltage level will automatically adjust accordingly.
For each MIG process, the minimum and maximum power setting limits are different; the range is limited to work within a level that ensures optimal process quality.

Turn the main power setting (yellow) to edit the power level (amperage/speed). You can compensate for the voltage level based on arc height preferences by turning the secondary (blue) arc height adjustment. Approximately ±20% adjustment is allowed. The arc height indicator marks the chosen adjustment position, when the arc height adjustment is in its default position the cursor is in the green area.

In synergistic mode, the recommended amperage and sheet thickness for the selected wire speed are indicated.
With the EASY MODE the following status icons may be displayed if the setting is outside the optimal working range:



The sheet metal thickness is too small for the type of wire and transfer method being used. While welding is possible, it requires considerable skill from the welder. It is preferable to select a smaller wire diameter or change the material transfer method to a cooler one.



The sheet metal is too thick; consider welding in multiple passes to ensure proper penetration and reduce distortion from excessive heat. However, you can disregard this recommendation if you intend to fill the weld or work at a very high travel speed.



The recommended thickness shown on screen corresponds to a lower feed speed. The thickness is excessive. The icon appears together with the symbol **MAX**.



The recommended thickness shown on screen corresponds to a higher feed rate. The thickness is too low for the selected MIG program. Consider choosing a MIG program with a smaller wire diameter or a cooler material transfer setting. The icon is displayed with the symbol **MIN**.

MANUAL ADJUSTMENTS IN MIG MODE

Manual adjustment emulating conventional transformer equipment is possible for standard transfer types. Feed rate/amperage adjustment and voltage adjustment are independent. You will need to disable synergistic mode from the **MODE** screen. With **CLASSIC** operating mode, adjustment is always **MANUAL**.

MIG OPERATING MODE SELECTION

The device allows you to work in different modes depending on which buttons on the torch are pressed:

2T: Welding while holding the button down.

4T: During the first press, welding begins and the power is adjusted to a suitable level (Hot Start) to create the weld pool. When the button is released, the amperage level gradually adjusts to the set nominal level. The welding arc is maintained at the automatically set level. Pressing the button again gradually adjusts the power level to a suitable finishing value to fill the crater. Releasing the button stops the arc.

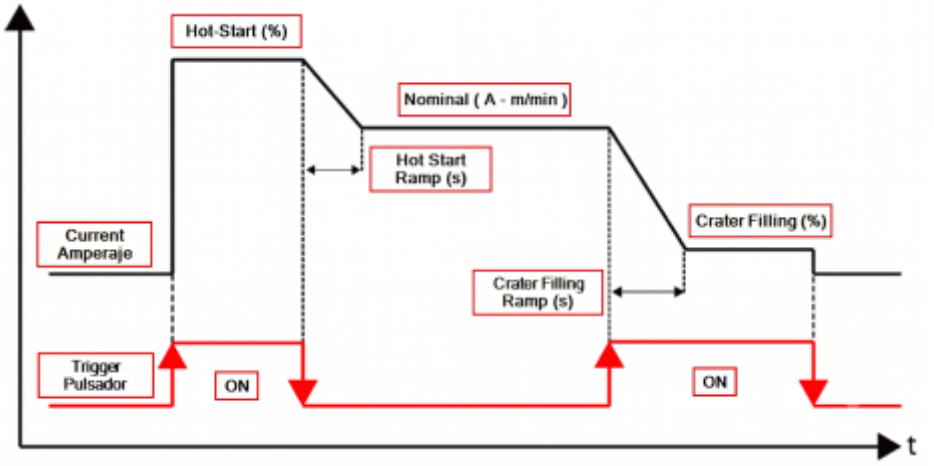

It is recommended to regularly use the MIG operating mode in 4 Strokes. This mode allows controlling the creation of the initial fusion pool, avoiding fusion defects at the beginning of the bead. Likewise, it allows controlling the filling of the final crater according to its particular application case.

The **4 Strokes mode** allows you to precisely control the level of power to be applied when starting or ending the welding bead on the edge of the piece. For stainless steels or temperature-sensitive materials such as aluminum alloys, 4 Strokes mode is ideal.

The **2 Strokes mode** allows you to time the duration of the welding points, and if desired the repetition interval using the **SPOT** function.

For other advanced settings, consult the web application on your device. The web application on your computer has a "**Welding Assistant**" that can guide you through the tuning process for your application.

ATTENTION

As a safety measure, if the torch button does not ignite the arc,**5 seconds**The wire will stop and the power will be cut off. This can prevent accidents if the trigger is accidentally pressed while the torch is resting on an object.

ATTENTION

If desired, upon completion of a MIG weld bead, the control panel can display the average amperage and voltage values recorded for the last cord.
This option is activated from the settings (SETUP). Access to the settings is through the MENU.

GAS AND FEEDING MATERIAL CONSUMPTION

The table below shows the recommended gas type and flow rate for the main filler materials. Proper adjustment is crucial to reduce consumption and achieve optimal welding results. The table also shows the estimated material consumption based on the set feed rate.

Material Group	**Diameter (mm)**	**Compatible Gas Types**	**Gas flow rate (l/min)**	**Wire consumption (g) per (m/min) adjusted**
Steel	0.8	Argon + CO_2 15% CO2 100%	7 - 8	3.9
	1.0		9 - 10	6.1
	1.2		11 - 12	8.8
	1.6		12 - 14	15.9
Stainless Steels	0.8	Argon + $CO2_2$ 2% Argon + He 10% + CO_2 2%	7 - 8	4.0
	1.0		9 - 10	6.2
	1.2		11 - 12	8.9
	1.6		12 - 14	15.9
Aluminum	1.0	Argon	9 - 10	2.1
	1.2		11 - 12	3.0
	1.6		12 - 14	5.4
CuSi / CuAl (Brazing)	0.8	Argon Argon + $CO2_2$ 2%	7 - 8	4.2
	1.0		9 - 10	6.6
	1.2		11 - 12	9.6

It is recommended to properly adjust the pre-gas and post-gas times to obtain optimal gas consumption while protecting the weld.

Use the “**WPS Welding Assistant**” of the web application for more details on gas settings and material consumptions for each particular set point. If you link your device to your account **WaaS Welding** You will be able to control all gas, filler material and electricity consumption records.

MMA WELDING OPERATION

ATTENTION

AeroMIG models only allow welding with the MIG/MAG process;
MMA welding **CANNOT** be selected.

Connect the electrode holder clamp and ground clamp according to the indications of the electrode in use (use the power terminals positive and negative from the outside of the equipment).

NO-LOAD VOLTAGE REDUCTION SYSTEM

In MMA welding mode the equipment can operate with the safety function **VRD** (Voltage Reducing Device). This feature can be useful to increase operator safety in environments where humidity and contamination could pose a risk of electrical shock. If this function is activated, the no-load voltage does not exceed 12 V_{DC}, providing a higher level of security. For security reasons, this feature is not displayed on the main screen to not modify accidentally. To enable or disable this option go to **MENU** and later **SETUP**.

CELLULOSIC / ALUMINUM MODE

The equipment features a material transfer control system that dynamically manages the sensitivity of the arc-force function for special MMA welding electrodes, such as **cellulosic or aluminum**. This function is not displayed on the main screen; to enable or disable this option, go to **MENU** and then **SETUP**.

ATTENTION

To change polarity and/or connect/disconnect accessories, turn off the equipment and wait a few seconds.
Be sure to tighten the outer terminals firmly to prevent them from overheating.

The consumption of the filler material will depend on the type of joint, position, advance speed and deposition rate of the type of electrode in use.

Use the "**WPS welding Assistant**" of the web application for more details on gas settings and material consumptions for each particular set point. If you link your device to your account **WaaS Welding** You will be able to control all gas, filler material and electricity consumption records.

For other advanced settings, consult the web application on your device. The web application on your computer has a "**Welding Assistant**" that can guide you through the tuning process for your application.

TIG WELDING OPERATION

ATTENTION

AeroMIG models only allow MIG/MAG welding;
TIG welding **CANNOT** be selected.

Select the TIG process. Through the work mode it is possible to choose 2-stroke, 4-stroke operation, as well as the type of welding **arc: normal** or **pulsed**.

The polarity of the torch must always be negative. The piece will always be connected to the positive using the ground clamp. 100% Argon gas must be used.

The equipment generates arc ignition for TIG welding processes by contact. Follow the steps below to initiate the arc correctly.

1. Lightly press the electrode against the piece to be welded, press the torch button and wait 1-2 seconds.
2. The shielding gas will begin to flow and the tungsten electrode will heat up slightly to allow the arc to ignite.
3. Slowly lift the electrode from the workpiece by rotating the torch so that the nozzle remains in contact with the workpiece.
4. The arc will start and the amperage will increase to the previously set level.

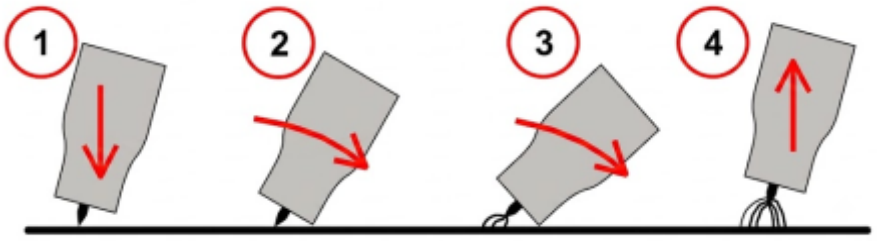

ATTENTION
Do not try to ignite the arc by striking the electrode as if it were a match.
This would cause premature wear of the tungsten electrode.

TIG OPERATING MODE SELECTION

The equipment allows you to work in different modes of operation:

- **2 Strokes:** Welding while keeping the button pressed.
- **4 Strokes:** During the first press, the arc ignition sequence will be carried out and the device will generate an initial current. When you release the button, the amperage level will progressively rise to the set level. The welding arc will be maintained at the set level automatically. When you press the button again, the amperage will progressively decrease to the final value; this final level will be maintained until you stop pressing the button.

TIG PULSATION MODE SELECTION

Normal TIG Mode

The amperage remains constant according to the preset level in I_1 and the remote potentiometer when in use.

Pulsed Arc TIG Mode

The Pulsed Arc TIG welding mode is characterized by alternating between two levels of welding current (I_1 and I_2).It is possible to define the amperage and interval duration for each level. The Pulsed Arc TIG mode allows for better control of the weld pool, enabling improved results under challenging conditions. It reduces the heat input to the joint, thus minimizing distortion. It allows for synchronized material deposition, achieving a uniform travel rate during welding. It also improves the visual appearance of the weld bead.

DC TIG WELDING

Select polarity **DC** in TIG mode to weld different types of steels. It is recommended to use tungsten electrodes with Thorium (red), Cerium (gray) or Lanthanum (gold). The tip of the electrode should be sharpened to a cone shape since, in this way, the arc will be more stable and the energy can be concentrated more at the root of the weld. Depending on the amperage you are welding at, a specific electrode diameter, nozzle, and gas flow rate are recommended. Follow the following reference table as a guide.

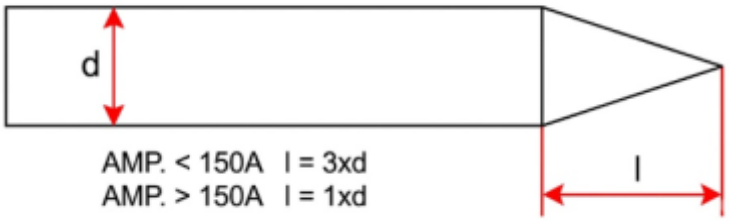

DC Amperage Range (A)	Electrode (mm)	Electrode Angle (º)	Standard nozzle (mm)	Standard nozzle gas flow rate (l/min)	Gas lens flow gas flow rate (l/min)
10 - 60	1,0	30	6,5 / 8,0	5 - 6	4 - 5
60 - 120	1,6	45	6,5 / 8,0 / 9,5	6 - 7	5 - 6
120 - 170	2,0	50	8,0 / 9,5	7 - 8	6 - 7
170 - 220	2,4	55	9,5 / 11,0	8 - 9	7 - 8
220 - 350	3,2	60	11,0 / 12,5	9 - 10	8 - 9
300 - 420	4	70	16	10 - 12	9 - 10

The consumption of the filler material will depend on whether or not it is necessary, the type of joint, position and speed of advance. To reduce gas consumption and improve results, the use of gas lens type nozzles is recommended.

Use the "**WPS welding Assistant**" of the web application for more details on gas settings and material consumptions for each particular set point. If you link your device to your account **WaaS Welding** You will be able to control all gas, filler material and electricity consumption records.

TIG CONNECTION AND REMOTE CONTROL

AeroProcess DV / DVW equipment has a control connection for a TIG torch in the power unit. The TIG torch is connected to the negative pole, the control knob to the power unit connector and the gas intake of the TIG torch to the gas outlet present on the power unit.

If you use a torch with a regulation potentiometer, you can vary the welding amperage setting (from the nominal value programmed on the front panel to the minimum operating value of the equipment). This allows, with a single command, to reduce or increase the welding current setting of all the parameters associated with the nominal current. It is recommended to use original accessories. If you have to connect other accessories or remote control equipment, make sure that the connection is compatible. Incorrect or faulty connections can cause incorrect operation of the equipment and even a breakdown. The remote control potentiometer can be from 4K7 ohms to 20K ohms. An optimal value of 10K ohms is recommended. See figure below for reference on connecting compatible remote control systems.

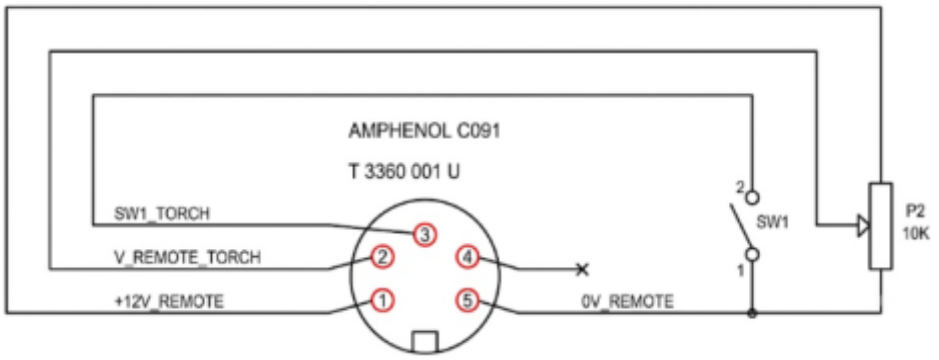

AeroProcess P/C equipment **DOES NOT have a specific connector for connecting the TIG torch** control knob.
The optional Solter ref adapter is required. *56210* connected to the Euro-connector of the MIG torch.
The torch power socket is connected to the negative pole, the control connector and the gas socket must be connected to the Solter adapter ref. *56210*. These models do not allow regulation adjustment by remote potentiometer.

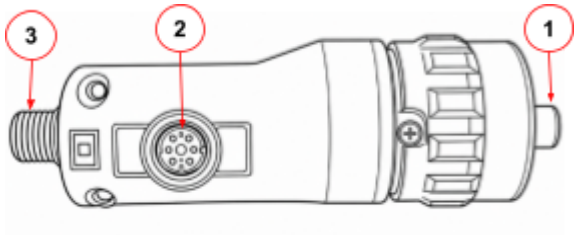

Nº	Description of Solter TIG adapter ref. 56210
1	MIG Euroconnector Connection
2	TIG Torch Control Connector
3	Gas connector for TIG torch

AEROFEED WIRE FEEDER Wi

TECHNICAL CHARACTERISTICS

TECHNICAL CHARACTERISTICS	AEROFEED Wi
Input voltage (U1)	24V DC
Maximum current	500 A DC
Applicable wire diameters	from 0.6 mm to 1.6 mm
Maximum feed speed	25 m/min
Maximum performance at 500A	60%
IP protection rating	IP23C
Weight	15 Kg

INTERNAL ELEMENTS

The wire feeding unit is the device that makes the wire pass through the contact tube of the gun to melt into the arc. MIG - MAG equipment has a system to vary the speed of advance of the wire, as well as a magnetic valve for gas control.

A motor transmits power to the drive rollers so that they move the wire from the coil to the contact tip of the torch. The rollers in contact are normally one flat and one with a bevel. The V-shaped bevel for hard materials such as steels, U-shaped for soft materials such as aluminum and slotted for tubular steels. It is essential to select the roller according to the diameter and material of the wire in use.

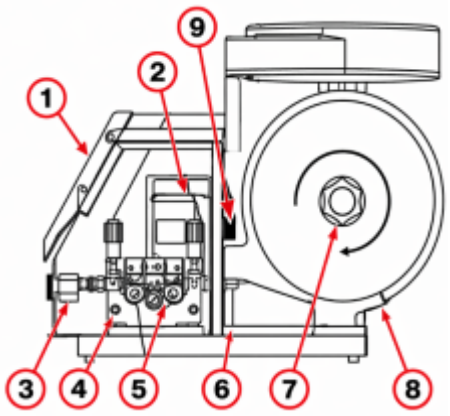

Nº	Description
1	Control Panel
2	Roller pressure adjustment
3	Euroconnector MIG/MAG
4	Wire Feed motor
5	Drivers rollers
6	Wire guide
7	Wire reel clamping and braking
8	Wire coil
9	Power unit connector

EXTERNAL ELEMENTS

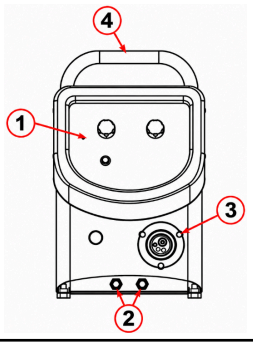

Nº	Description
1	control Panel
2	Cooling connectors
3	Euroconnector MIG/MAG
4	Carrying handle

Transport Handle
Whenever you wish to handle the Aerofeed unit, use the carrying handle. This handle must also be used if you wish to hang the reel. The unit's handle must be electrically insulated from the metal structure from which it will be suspended.

AEROFEED WI WIRE FEEDER ACCESSORIES

REFRIGERATION KIT (56205)

To assemble the Aerofeed cooling kit, pass the two water tubes from the Aerofeed connection through the hole in the base (see image below), connect them to the quick-connect fittings supplied with the kit, respecting the blue and red colors. Position and screw the kit to the base of the wire feeder,

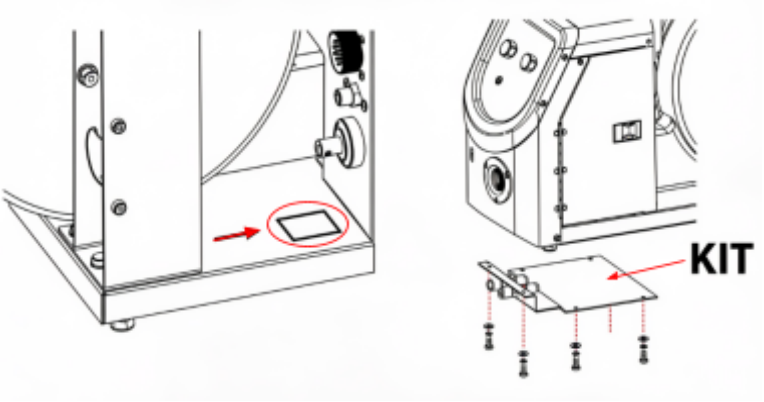

WHEEL KIT (56206)

To assemble the wheel kit, first remove the 4 nylon feet from the bottom of the unit, then attach the wheels to the 2 supports and screw these to the base of the wire feeder. **DO NOT REUSE THE NYLON FEET** screw the supports, use the new steel screws supplied with the kit.

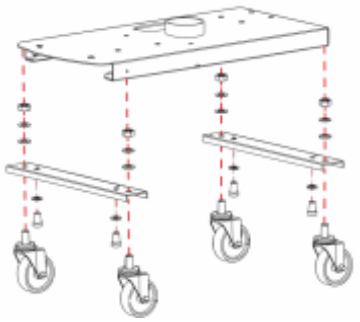

ROLLERS

ROLLERS	MATERIAL	REF. for the 2 Unit kit
0.6 - 0.8 Slot V	Fe, SS,CuSi, CuAl, NiCr	55606
1.0 - 1.2 Slot V	Fe, SS,CuSi, CuAl, NiCr	55607
1.2 - 1.6 Slot V	Fe, SS,CuSi, CuAl, NiCr	55608
1.0 - 1.2 U-slot	Al	55609
1.2 - 1.6 U-slot	Al	55610
1.0 - 1.2 Grooved Slot	Flux Core, Metal Core	55611
1.2 - 1.6 Stretched Slot	Flux Core, Metal Core	55613

COOLING UNIT

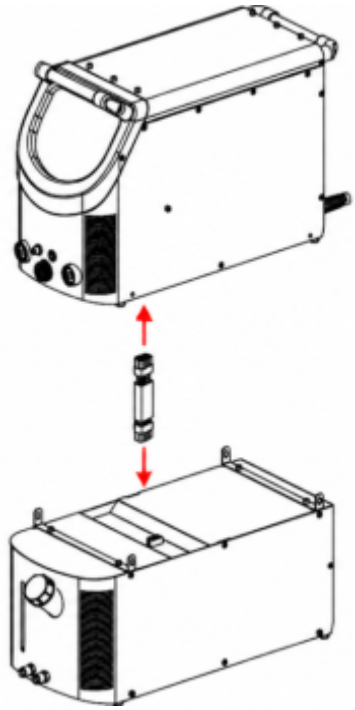

The AeroProcess P, C, and DV models do not have the liquid cooling option for the welding torch.
The AeroProcess DVW models can be connected to the AeroCOOL cooling module. See side image.
The cooling unit of the welding equipment is designed to operate fully automatically. Please verify the selected operating mode for the cooling unit.

Connect the cooling unit to the remote connector located on the base of the power unit. It may be necessary to remove its protective cover. Please ensure that the connection between the cooling unit and the power unit is secure once they are interconnected, as this will prevent any loose connections in the interconnecting cable.
During first use, you may need to check the coolant priming of the circuit. The unit will attempt to do this automatically. Alarm message 10 may appear during the process. You may need to tilt the unit backward to help prime the recirculation pump correctly.

The coolant level can be checked using the level indicator on the front sight. It is recommended to keep the level above half capacity. Use Solter coolant, part number 10214, for optimal protection.

TECHNICAL CHARACTERISTICS

TECHNICAL CHARACTERISTICS	AEROCOOL
Input voltage (U1)	400 VAC +-15%
Frequency (Hz)	50 / 60 Hz
Power supply current	1 A
P1 l/min (KW)	0.9
P max. (bar)	3.5
IP protection rating	IP23C

EXTERNAL ELEMENTS

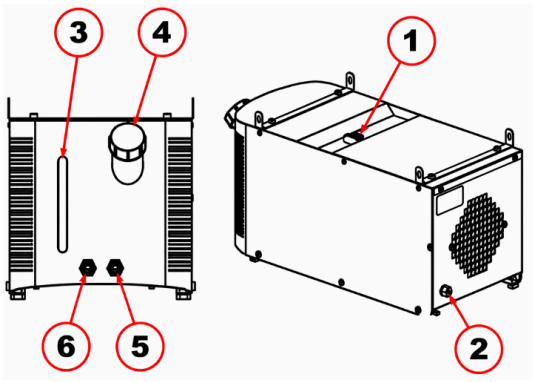

Nº	Description
1	Control Connection (DVW Models)
2	Fusible
3	Tank Level
4	Coolant tank
5	Input Connector - Red
6	Output Connector - Blue

ANOMALIES AND DEFECTS

The welding equipment is equipped with protective features that allow you to check the unit's overall condition. In the event of any malfunction, the equipment will react immediately. The warning light will illuminate, and the corresponding error or alarm code will be displayed on the main screen.

BREAKDOWNS

In the event of any malfunction that poses a danger to people, equipment, and/or the environment, the equipment must be disconnected immediately and ensured that it cannot be reconnected until the cause of the malfunction has been resolved. Malfunctions should only be addressed by qualified personnel, taking into account the equipment's safety instructions.

ATTENTION

Manipulation of internal parts of the equipment must be carried out only by qualified personnel.
There is a risk of electric shock when contacting live parts.
It should NOT be operated without covers properly in place. Before accessing the interior, disconnect the equipment from the power supply and wait at least 5 minutes before carrying out any maintenance operation

LIST OF POSSIBLE FAULTS

ISSUE	POSSIBLE CAUSE
The equipment does not start.	Check if there is power at the outlet. Faulty switch. Turn off the equipment or unplug it for 1 minute, then try starting it again. Faulty electronic circuit.
Anomaly indicator illuminated	Turn the equipment off for one minute and turn it on again. Check the Error / Alarm code If it is a temperature alarm caused by exceeding the equipment's duty cycle, wait until a safe temperature is reached. If the error persists, contact technical support.
The wire doesn't come out correctly.	Verify that the drive system rotates correctly. The reel brake is too tight. Incorrect drive system accessories. Torch or consumables in poor condition.
The wire is not coming out at the desired speed	At the start of welding, the wire always comes out at a minimum speed. Verify the operation of the wire feed system by threading it manually.
No protective gas is coming out	Check that there is gas in the cylinder. Check that the flow rate is correct. Torch may be clogged and/or punctured. The gas valve may be faulty.
The electric arc is not stable and the wire collides with the piece.	The welding program does not match the type of welding being used. Verify that we have the correct consumables and rollers.
The arc does not start	The power socket on the part is not making contact. Incorrect equipment connection (polarity). Damaged welding cables. TIG HF ignition mode not selected. Type of gas in use not suitable.
Incorrect arc start	Faulty electrical connections. Dirty and / or rusty part. Incorrect settings.
Low penetration	Low welding current. Excessive welding speed. Reversed polarity.
Unstable electric Arc / Spatter	Cables and connections in poor condition. Dirty and/or rusty part. Worn torch consumables. Incorrect working setting. Incorrect welding position. Inadequate welding program.

ERROR CODES

The following table lists possible errors that may occur during equipment operation. Check the cause of each error. Restart the equipment. If the error persists, contact Solter Soldadura's official technical support service.

Code	Description
0	Everything is fine, no errors have been detected.
1	Power supply voltage anomaly. The mains voltage supplied is not within the correct operating parameters. If this type of error appears, you should check the mains voltage of your installation. This type of error can occur due to the use of extension cords that are too long or have insufficient cable gauge. If the equipment is connected to a generator, you should check that the generator meets the recommended specifications and that its voltage is properly set.
2	Incorrect connection of the power phases. Check the plug and the socket. If the error persists, it may be due to a failure in the main inverter stage.
3	Welding current transducer calibration failure. The equipment incorporates an advanced welding current reading system; this reading is essential for accurate operation. If the equipment detects any reading anomaly upon startup, it will stop and display this error code. It is recommended to disconnect all accessories connected to the welding power terminals and turn off the equipment for a few minutes.
4	Welding voltage transducer calibration failure. The equipment incorporates a testing system that ensures its correct operation. If, upon startup, any anomaly is detected in the output inverter module that prevents correct welding voltage adjustment, the equipment will stop and display this error code. It is recommended to disconnect all accessories connected to the welding power terminals and turn off the equipment for a few minutes.
5	Communication failure between the power unit and the control panel. It is advisable to turn off the equipment for a few minutes and try starting it again.
6	Communication failure between the power unit and the remote computer. It is advisable to turn off the equipment for a few minutes and try starting it again.
7	Internal communication failure on the CAN bus. It is advisable to turn off the equipment for a few minutes and try starting it again.
8	Program memory data integrity failure. Restart the computer. During the boot process, the computer will attempt to recover the defective memory sectors.
9	User interface control system failure.
10	Calibration failure in the temperature reading of the main inverter stage. This error may appear temporarily if the equipment has been stored at temperatures below -10ºC. If so, turn on the equipment and wait until it reaches a minimum temperature to ensure optimal performance.
11	Calibration failure in the temperature reading of the output power stage. This error may appear temporarily if the equipment has been stored at temperatures below -10ºC. If so, turn on the equipment and wait until it reaches a minimum temperature to ensure optimal performance.
12	Calibration failure in the temperature reading of the input stage. This error may appear temporarily if the equipment has been stored at temperatures below -10ºC. If so, turn on the equipment and wait until it reaches a minimum temperature to ensure optimal performance.
13	Calibration failure in auxiliary temperature reading. This error may appear temporarily if the equipment has been stored at temperatures below -10ºC. If so, turn on the equipment and wait until it reaches a minimum temperature to ensure optimal performance.
14	Unsupported user interface version.
15	Unsupported data program version.
16	Corrupt operating parameters.

17	Synchronization between the main control unit and the user interface is pending.
18	Detection of a modified user interface compared to the original.
19	User interface not supported.
20	Uninitialized data memory.
21	Incorrect user interface compatibility check and main control.
22	Factory calibration failure.
23	Incorrect serial number assigned.
24	Main control unit software update process failure

ALARM CODES

The following table presents the possible alarms that may appear during the operation of the equipment. These alarms DO NOT represent a malfunction of the equipment. They occur in the event that the operation cycle is exceeded or in the event of a *lack of appropriate maintenance*. Alarms in the range of 10-15 must be manually validated by pressing the CONFIRM button, when the causes that cause them have been previously reviewed.

Do not validate the alarm without reviewing the cause that produces it and consequently carrying out the appropriate maintenance. If you insist on operating the equipment for a long time with alarms present, it could cause a breakdown. This breakdown will not be covered by the equipment warranty as it is a **lack of maintenance**.

Code	Description
0	Everything is fine, no alarms have been detected.
1	Excessive temperature in the main inverter stage. Wait for the unit to reach a safe operating temperature in this stage. Ensure that the ventilation openings are not obstructed.
2	Excessive temperature in the power output stage. Wait for the equipment to reach a safe temperature in this stage. Ensure that the ventilation openings are not obstructed.
3	Excessive temperature in the input power stage. Wait for the equipment to reach a safe operating temperature in this stage. Ensure that the ventilation openings are not obstructed.
4	Excessive temperature in the auxiliary stage. Wait for the unit to reach a safe operating temperature in this stage. Ensure that the ventilation openings are not obstructed.
5	The equipment has detected voltage spikes in the power supply. Continuing to operate with an unstable power supply may cause internal damage. Please verify that the power supply is working correctly.
6	The device has detected a supply voltage that is too low to ensure optimal operation. Please verify that your power supply is correct.
7	The equipment has detected an unstable power supply voltage. This situation may be caused by a fault in the power terminal connections, or by powering the equipment with an unsuitable generator.
8	Overconsumption alarm. This alarm will automatically disappear after a few minutes. Please wait for the device to return to its normal state.
9	Over-temperature alarm on the remote liquid cooling unit. Please wait for the unit to return to a safe operating temperature. Ensure that the ventilation openings are not obstructed.

10	No return flow is detected in the liquid cooling system. Verify the correct connection of the liquid connection ports to the cooling unit and/or torch. Check that no conduit is affected by **pinching or crushing**. Check the **coolant level**. If the alarm persists and the above points have been properly checked, it may indicate that the internal coolant filter is clogged.
11	The absence of a shielding gas connection for the welding process you intend to perform has been detected. Verify that the shielding gas is connected to the inlet located at the rear of the equipment. Verify that the cylinder contains gas and that its flow regulator is properly adjusted.
12	The flow transducer reading for the cooling unit is incorrect. This fault can be caused by improper priming of the cooling system, or if the internal filter is clogged.
13	Speed transducer calibration failure. Check the correct connection between the power stage and the winder. Check the connection located on top of the motor.
14	The main motor of the wire feeder blocked.
15	Torch secondary motor blocked.
16	The equipment has detected that one of the 3 phases has not been connected. Check the power supply and the connections inside the plug.
17	The motor cannot reach the set speed. Check the roller pressure and brake adjustment. The torch may require maintenance on the guide and/or tip.
18	Incorrect material selection, restart the equipment.
19	During startup, or while recovering from an error or alarm, the equipment has detected a remote start button, on the torch or foot pedal, in the ON position. For safety reasons, the equipment will not operate until the button is returned to its OFF position.
20	Reserved Alarm
21	Reserved Alarm
22	Refrigeration unit not found. Check the connection between the power unit and the remote refrigeration unit. Check the fuse for the remote refrigeration unit, located on the back of the unit.

MAINTENANCE INSTRUCTIONS

Periodic monitoring of the equipment is recommended. Before performing any maintenance, disconnect the equipment from the power supply. Reduce the recommended maintenance intervals under severe operating conditions.

INTERVAL	ACTION
Weekly	Check the condition of the wiring and external accessories.
	Replace worn components in the torch and wire feed system. Check the cables. Clean and tighten the electrical connections of the welding circuit. Blow out the ventilation tunnel with pressurized (dry) air from the ventilation intake.
Quarterly	Check the anchors of the transport unit, the refrigeration unit, and the power unit.
Annual	Perform a complete inspection as specified in the welding equipment standard EN-60974. Contact your distributor if you have any questions.

ECODESIGN AND SUSTAINABILITY

In our firm commitment to the environment and sustainability, our welding equipment strictly complies with the demanding requirements of the Ecodesign Regulation (EU) 2019/1784. This milestone is made possible by our in-house engineering department and our comprehensive manufacturing process carried out at our own facilities, mastering every step from electronics development to final assembly.

Our design philosophy is rooted in the premise of the circular economy: we develop machinery specifically designed to be repaired, technologically upgraded, and recycled. This combats planned obsolescence and strictly complies with the core pillars of the European directive:

- **Maximum energy efficiency:** High-performance power sources and minimized electrical consumption in idle (standby) mode.
- **Spare parts availability (10 years):** We guarantee the supply of essential spare parts for a minimum of 10 years after the production of the last unit of the model.
- **Right to repair:** We provide access to diagnostic information, wiring diagrams, and repair manuals to ensure the proper maintenance of the equipment.
- **Design for disassembly:** An optimized assembly that facilitates access to, as well as the separation and recovery of, components and raw materials at the end of their useful life.

To support this vision and guarantee the maximum lifespan for each machine, we offer a direct factory repair service backed by a comprehensive, nationwide support network of official technical services, always ensuring prompt, highly qualified, and customer-focused support.

In line with our firm environmental commitment and the principles of the circular economy, when this equipment reaches the end of its useful life, it must not be disposed of as conventional waste. Instead, it must be taken to appropriate collection points for recycling. To facilitate the disassembly process and maximize resource recovery, we have included a detailed table below that breaks down the main components of the equipment and their material composition. This information allows waste management professionals to correctly identify, separate, and process each element (such as copper, iron, aluminum, and engineered plastics), ensuring their effective reintegration into the production cycle as new raw materials. Please refer to the Parts Breakdowns Annex to cross-reference the items shown below.

EQUIPMENT	Copper	Fe	Al	Plastic
AeroProcess P 250 **AeroProcess P 270** **Aeroprocess P 300** **Aeroprocess P 320**	95527 0.10 Kg 31030 0.90Kg 30295 0.75Kg TOTAL; 1.75Kg	79500 0.15 Kg 30251 2.50 Kg 72982 1.50 Kg 72977 3.50 Kg 72929 0.25 Kg TOTAL: 7.90 Kg	95524 0.35 Kg 95534 0.65 Kg TOTAL: 1.2Kg	73168 0.15 Kg 77337 0.15 Kg 77325 0.25 Kg TOTAL: 0.55 Kg
AeroMIG C 300 **AeroMIG C 400** **AeroProcess C 300** **AeroProcess C 400**	73671 0,90 Kg 74965 1,30 Kg 74403 0,12 Kg 73131 0,50 Kg 74388 0,75 Kg 75175 0,10 Kg Cables 0,60 Kg TOTAL: 4,27 Kg	72872 4.00 Kg 79474 0,15 Kg 20021 1,00 Kg 72888 1,65 Kg 72884 1,60 Kg 79500 0,15 Kg 72874 1,40 Kg 72878 2,80 Kg 72880 2,00 Kg 72861 1,50 Kg 30071 2,60 Kg 30349 1,80 Kg 77322 0,63 Kg 77358 0,83 Kg 72924 1,10 Kg TOTAL: 23,25 Kg	30081 0.54 Kg 72889 0,40 Kg 69000338 1,60 Kg 69000342 0,80 Kg 69000312 0,30 Kg TOTAL: 3,64 Kg	72323 0.05 Kg 77337 0.15 Kg 77000 0.15 Kg 77461 0.05 Kg 77424 0.05 Kg 77326 0.15 Kg 77335 0.05 Kg 74123 0.03 Kg 77203 0.30 Kg 72327 0.05 Kg 77450 0.02 Kg 77453 0.01 Kg 30074 0.01 Kg 77323 0.60 Kg 74231 0.10 Kg TOTAL: 1,78 Kg
UTS transport vehicle		56173 23.00 Kg		
AeroFeed Support		56208 2.50 Kg	72920 0.15 Kg	
AeroFeed Wi	72981 0.13 Kg Cables 0.20 Kg TOTAL: 0.33 Kg	30116 3.00 Kg 72910 0.45 Kg 72908 0.40 Kg 72912 1.00 Kg TOTAL: 4.85 Kg		77203 0.30 Kg 72324 1.70 Kg 77335 0.05 Kg 77336 0.10 Kg 77577 0.01 Kg 77579 0.01 Kg 72331 0.01 Kg 77461 0.05 Kg TOTAL: 2.23 Kg
AeroFeed Water Kit		56205 0.95 Kg		
AeroCool 30	74383 0.15 Kg 79524 0.15 Kg TOTAL: 0.30 Kg	72306 1.00 Kg 79320 0.05 Kg 72320 0.15 Kg 72302 0.75 Kg 72304 1.25 Kg TOTAL: 3.20 Kg	79566 0.60 Kg	79531 0.01 Kg 79522 0.50 Kg 79799 0.10 Kg TOTAL 0.61 Kg
AeroProcess DV / DVW 320 **AeroProcess DV / DVW 400**	73574 0.10 Kg 74388 1.00 Kg 73671 0.90 Kg 74965 1.30 Kg 73131 0.50 Kg Cables: 0.60 Kg TOTAL: 4.40 Kg	79500 0.15 Kg 30251 2.50 Kg 72982 1.50 Kg 72977 3.50 Kg 72929 0.25 Kg TOTAL: 7.90 Kg	30092 0.60 Kg 72991 0.55 Kg 72309 0.40 Kg 73598 1.60 Kg 69000312 0.30 Kg 69000336 0.80 Kg TOTAL: 4.25 Kg	73168 0.15 Kg 77337 0.15 Kg 77325 0.25 Kg TOTAL: 0.55 Kg
AeroProcess DV / DVW 500	73574 0.10 Kg 74388 1.00 Kg 73671 0.90 Kg 74965 1.30 Kg 73131 0.50 Kg Cables: 0.60 Kg TOTAL: 5.00 Kg	79500 0.15 Kg 30251 2.50 Kg 72982 1.50 Kg 72977 3.50 Kg 72929 0.25 Kg TOTAL: 7.90 Kg	30092 0.60 Kg 72991 0.55 Kg 72309 0.40 Kg 73598 2.00 Kg 69000312 0.30 Kg 69000336 0.80 Kg TOTAL: 5.00 Kg	73168 0.15 Kg 77337 0.15 Kg 77325 0.25 Kg TOTAL: 0.55 Kg

ELECTRICAL DIAGRAMS

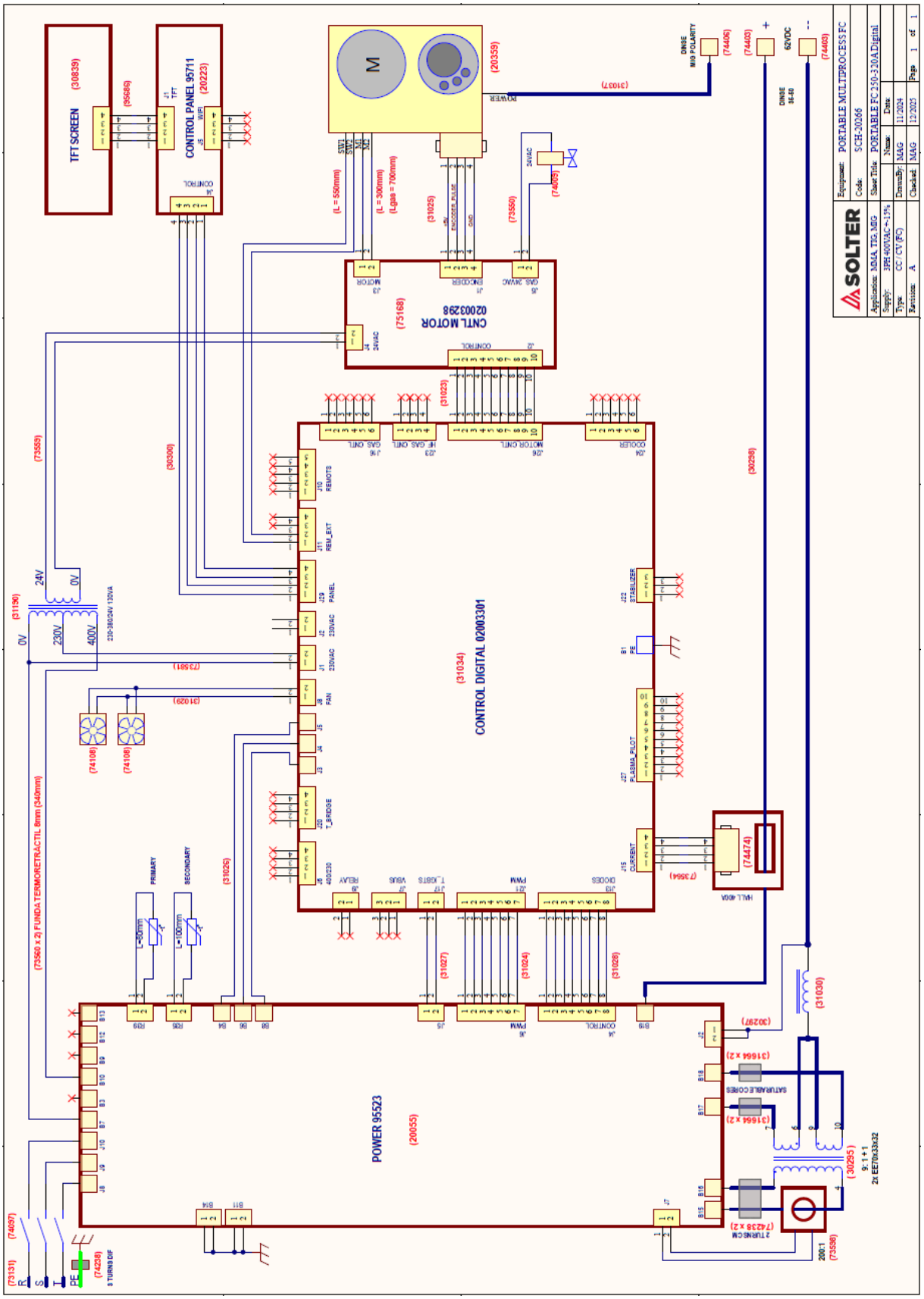

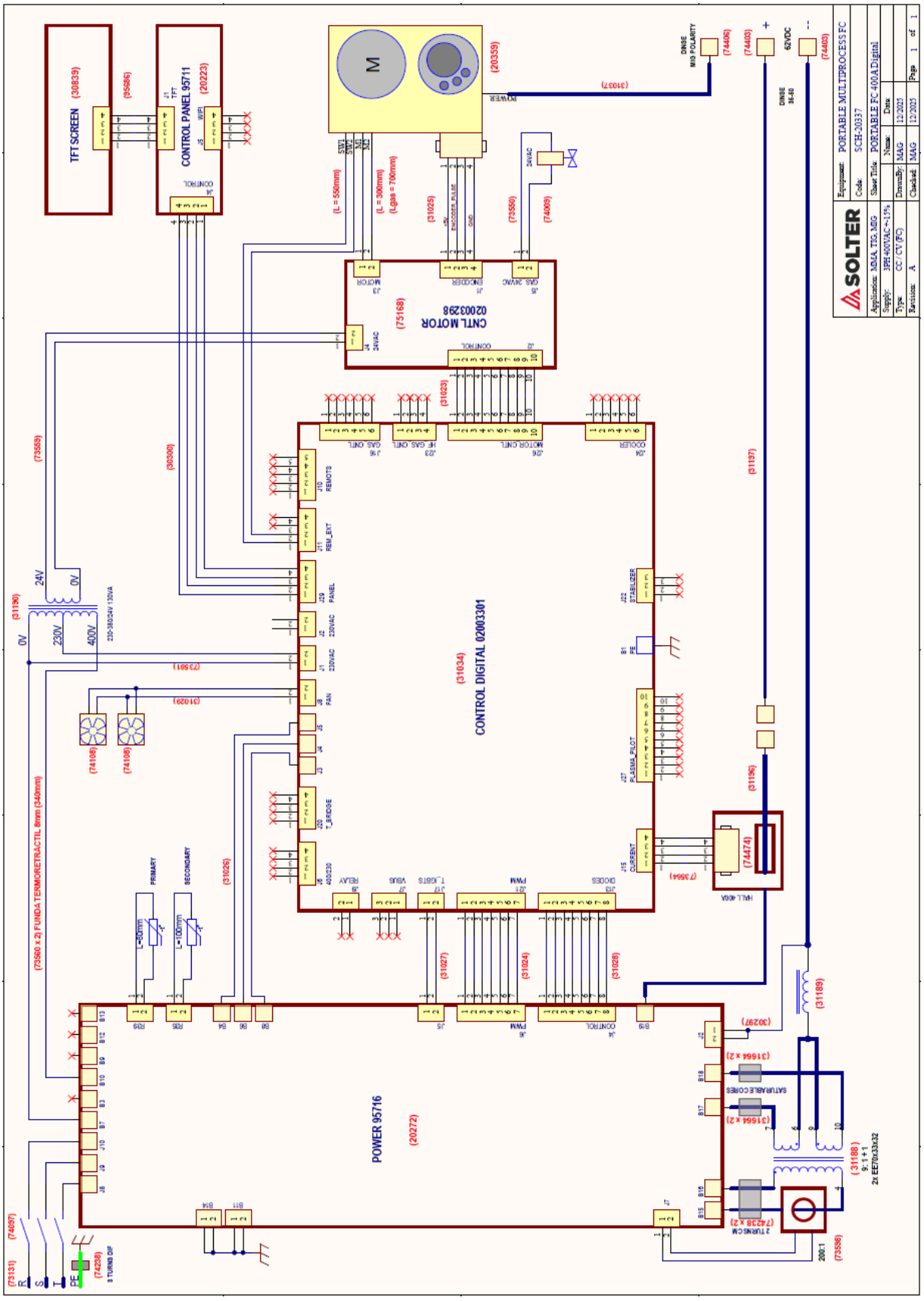
TFT SCREEN (30839)
CONTROL PANEL 95711 (20223)
CNTL MOTOR 02003298 (75168)
CONTROL DIGITAL 02003301 (31034)
POWER 95716 (20272)
SOLTER
Equipment: PORTABLE MULTIPROCESS FC
Code: SCH-20337
Sheet Title: PORTABLE FC 400A Digital
Application: MMA, TIG, MIG
Supply: 3PH 400VAC +-15%
Type: CC / CV (FC)
Revision: A
Drawn By: MAG 12/2025
Checked: MAG 12/2025
Page 1 of 1

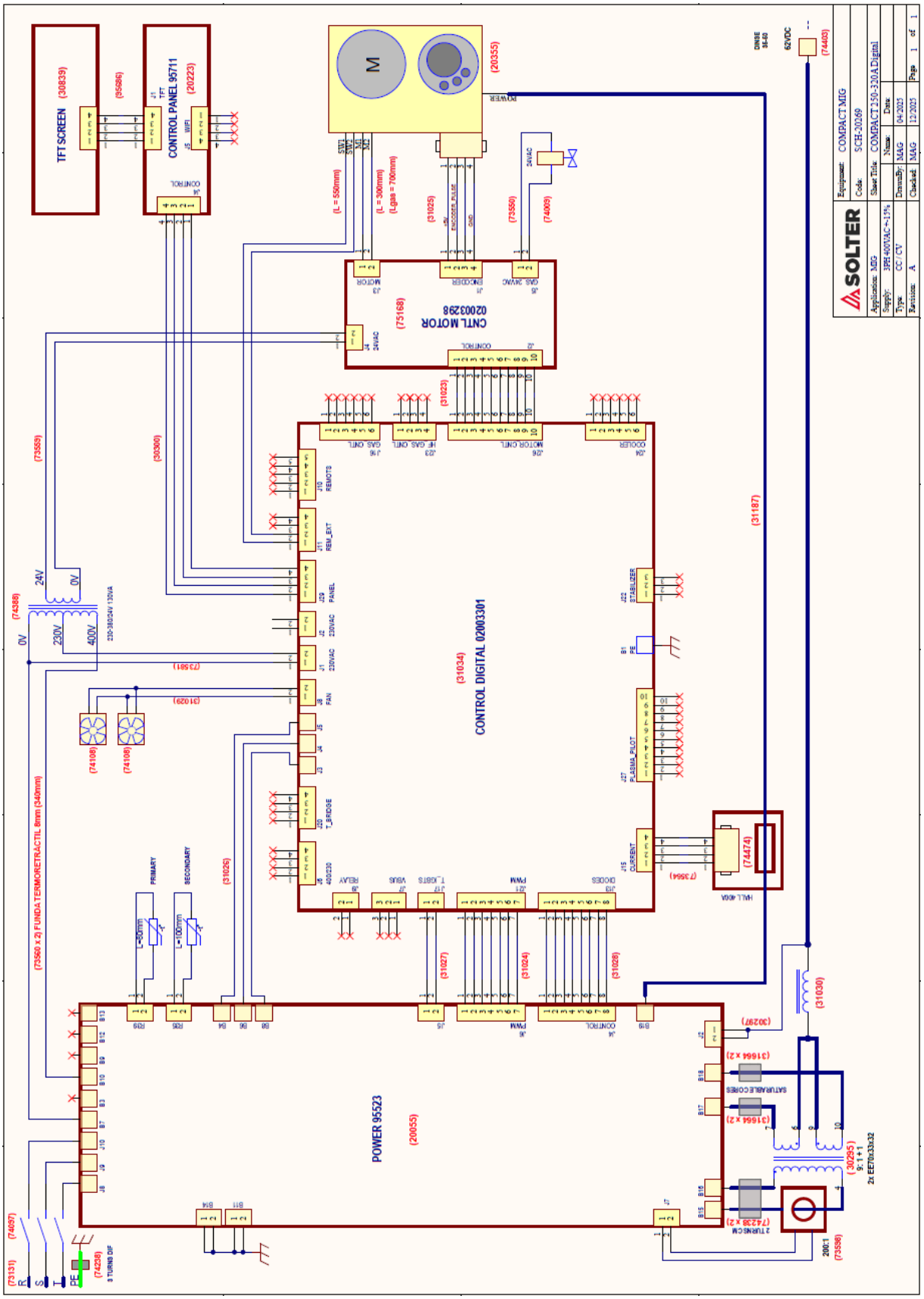
TFT SCREEN (30839)
CONTROL PANEL 95711 (20223)
CNTL MOTOR 02003298 (75168)
CONTROL DIGITAL 02003301 (31034)
POWER 95523 (20055)
SOLTER
Equipment: COMPACT MIG
Code: SCH-20269
Sheet Title: COMPACT 250-320A Digital
Application: MIG
Supply: 3PH 400VAC +-15%
Type: CC / CV
Revision: A
Drawn By: MAG
Checked: MAG
Date: 04/2025
12/2025
Page 1 of 1

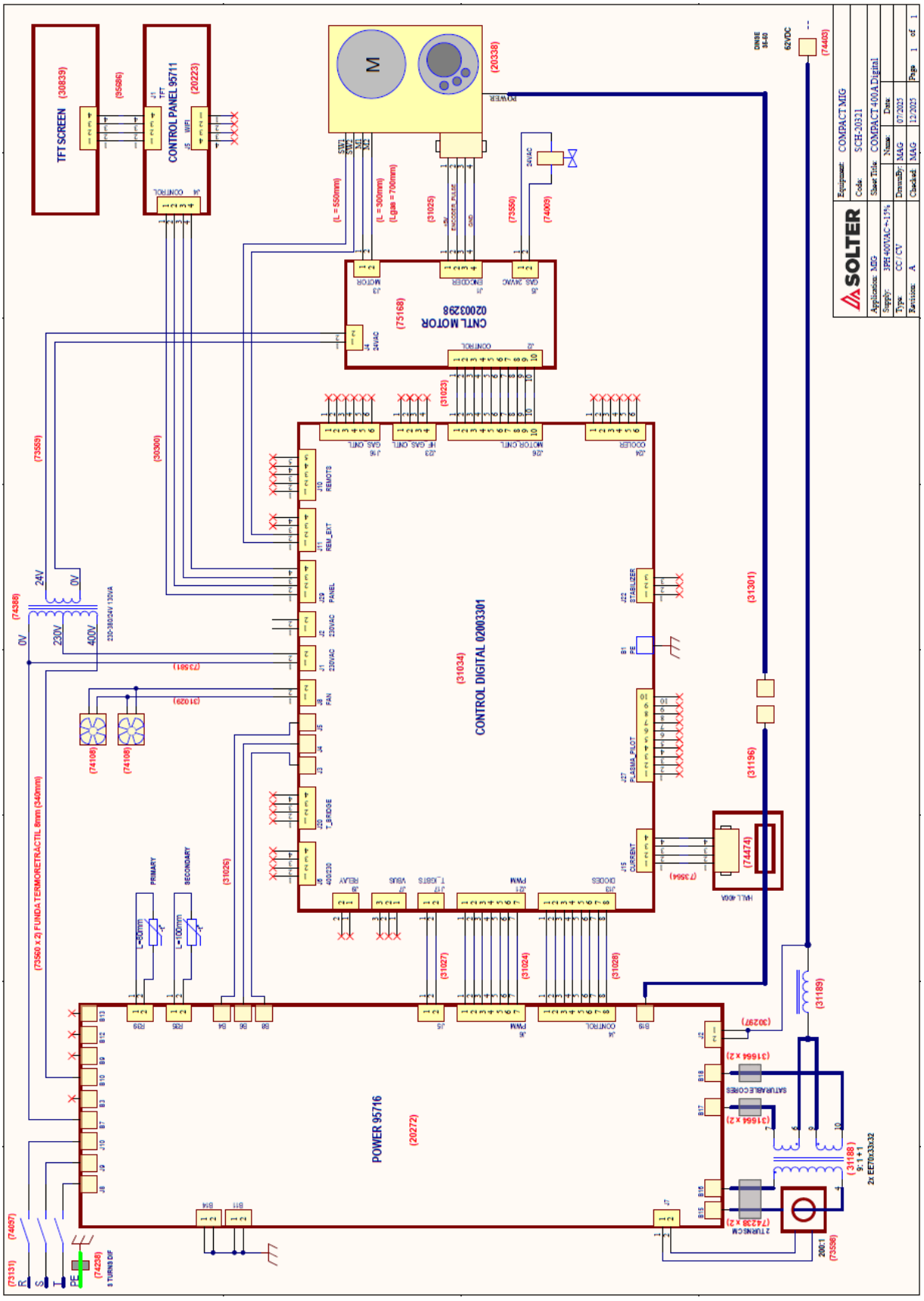
TFT SCREEN (30839)
CONTROL PANEL 95711 (20223)
CNTL MOTOR 02003298 (75168)
CONTROL DIGITAL 02003301 (31034)
POWER 95716 (20272)
SOLTER
Equipment: COMPACT MIG
Code: SCH-20321
Sheet Title: COMPACT 400A Digital
Application: MIG
Supply: 3PH 400VAC +-15%
Type: CC / CV
Revision: A
Drawn By: MAG
Checked: MAG
Date: 07/2025
12/2025
Page 1 of 1

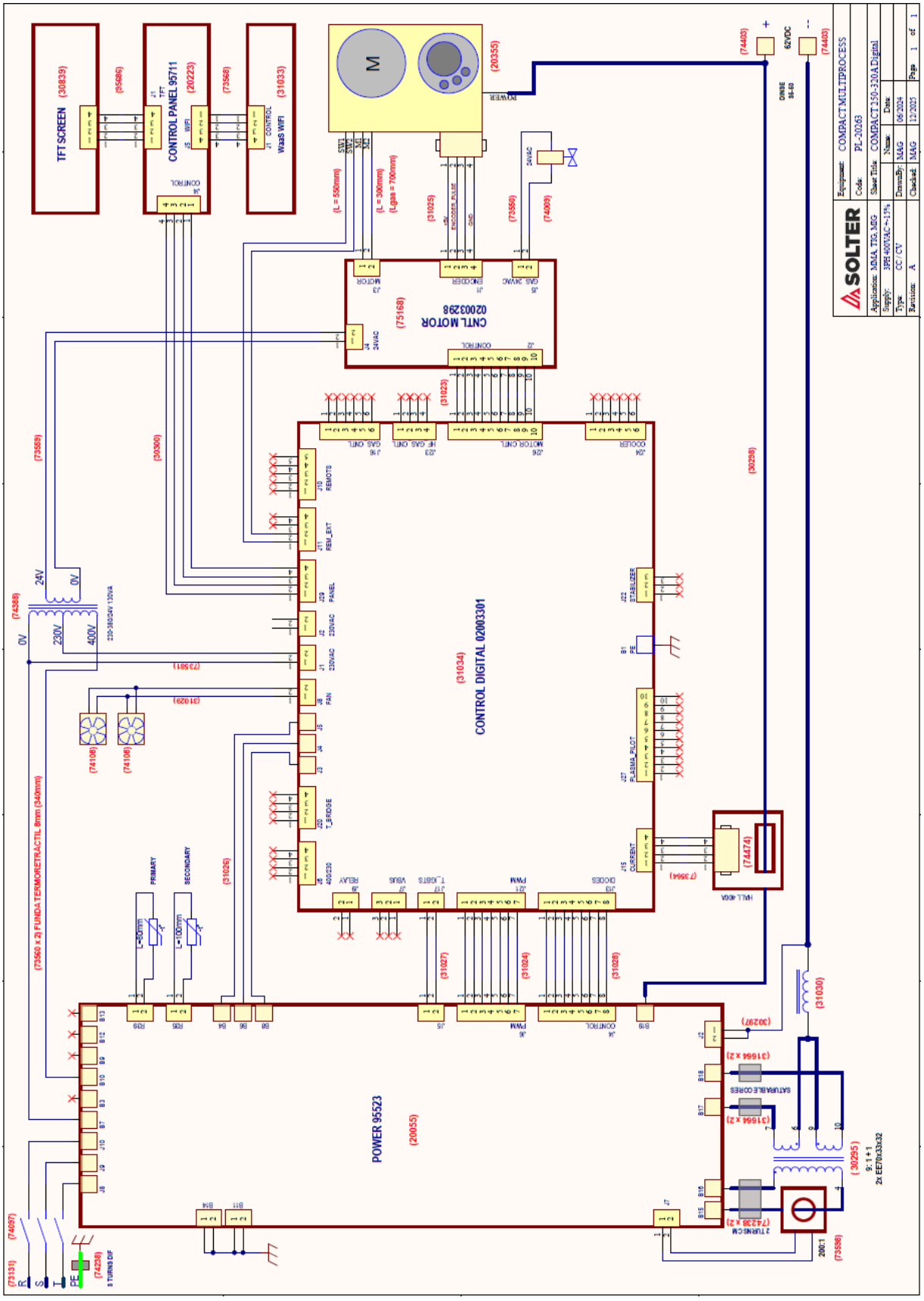
TFT SCREEN (30839)
CONTROL PANEL 95711 (20223)
WaaS WIFI (31033)
CNTL MOTOR 02003298 (75168)
CONTROL DIGITAL 02003301 (31034)
POWER 95523 (20055)
SATURABLE CORES
2 TURNS CM
HALL 400A
62VDC
COMPACT MULTIPROCESS
PL-20263
COMPACT 250-320A Digital
MMA, TIG, MIG
3PH 400VAC +-15%
CC / CV
A
MAG
06/2024
12/2025
1 of 1

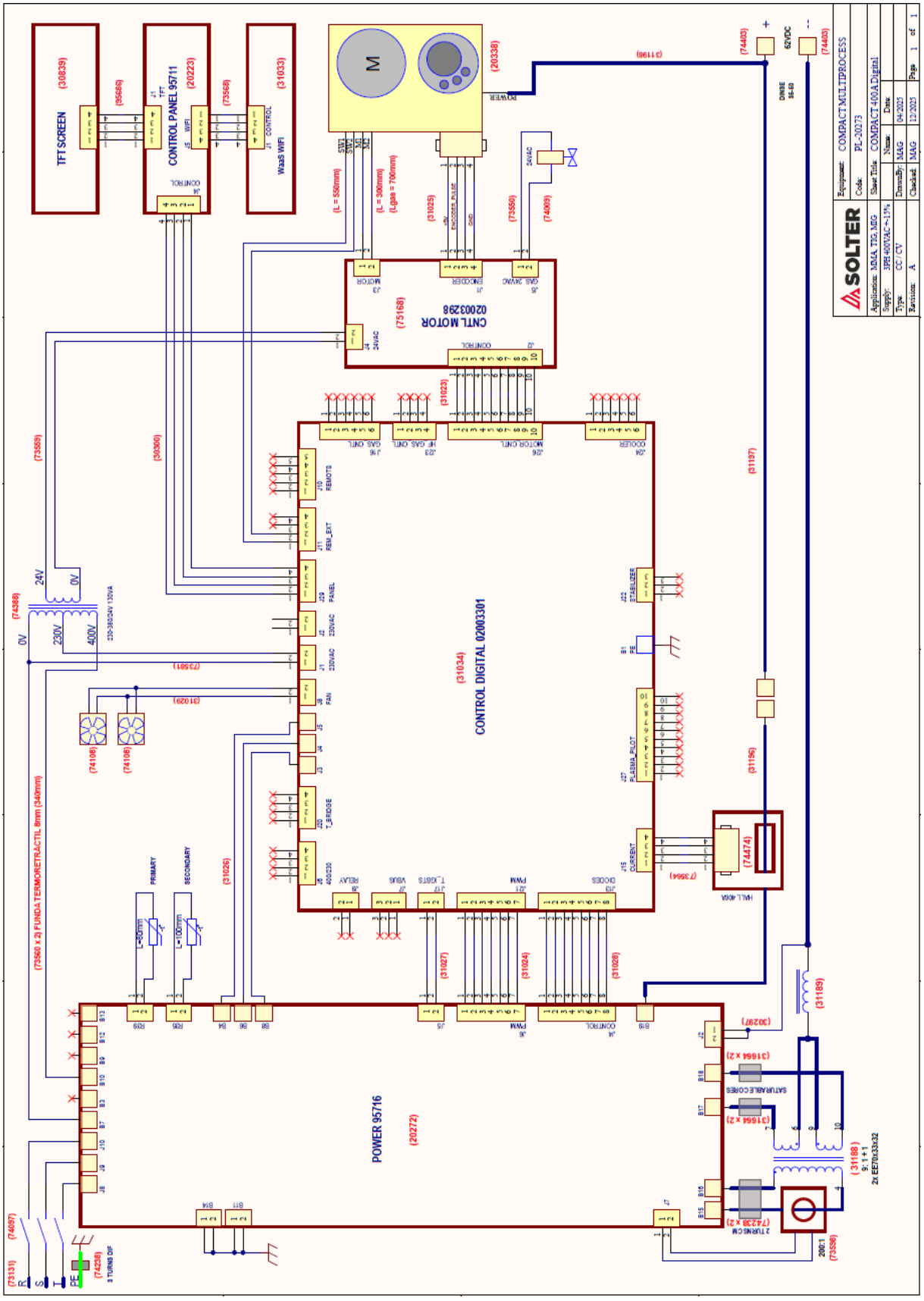
TFT SCREEN
CONTROL PANEL 95711
WaaS WIFI
CNTL MOTOR
02003298
CONTROL DIGITAL 02003301
POWER 95716
SATURABLE CORES
2 TURNS CM
HALL 400A
COMPACT MULTIPROCESS
PL-20273
COMPACT 400A Digital

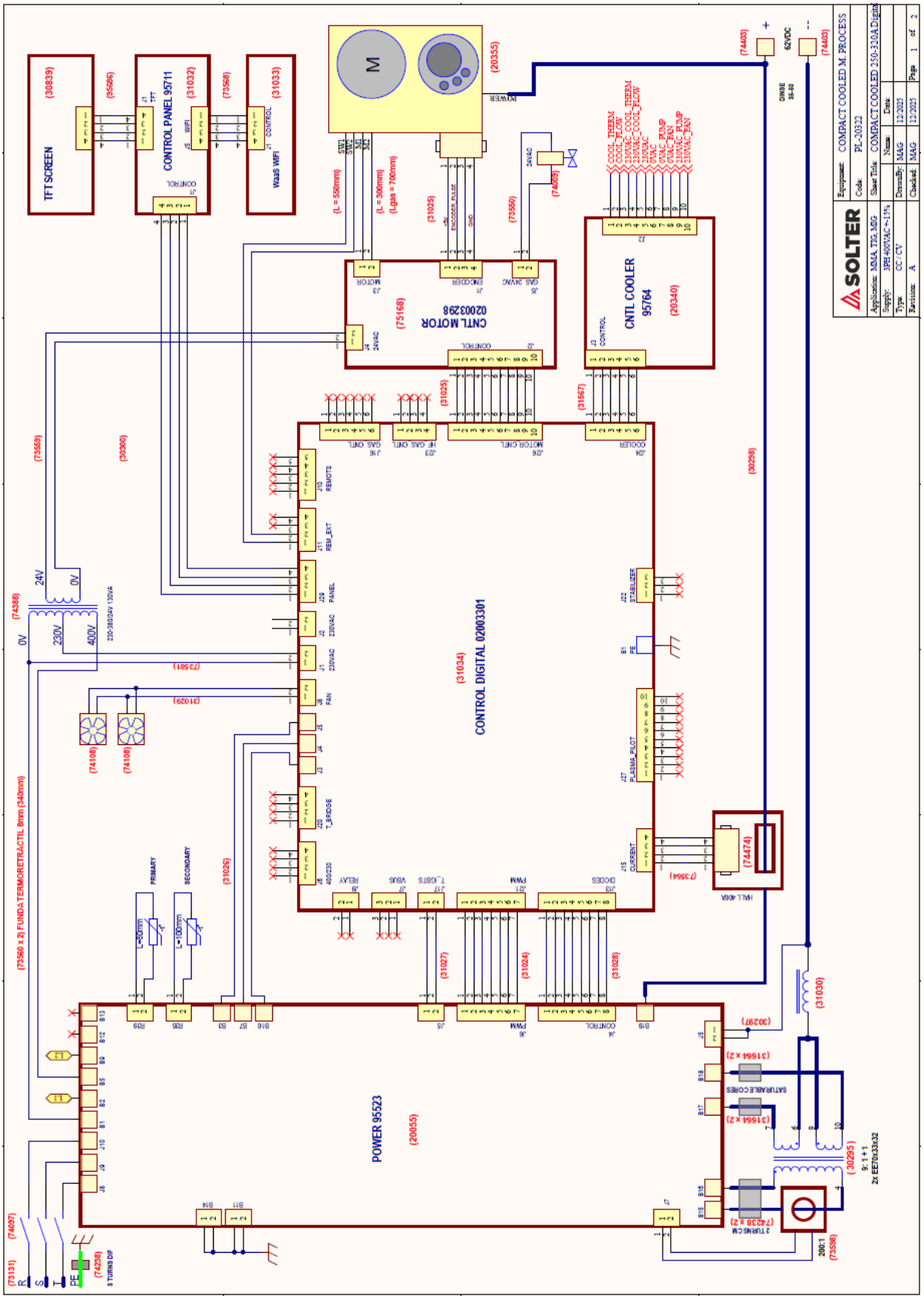
TFT SCREEN
CONTROL PANEL 95711
WaaS WIFI
CNTL MOTOR 02003298
CNTL COOLER 95764
CONTROL DIGITAL 02003301
POWER 95523
SATURABLE CORES
2 TURNS CM
HALL 400A
PRIMARY
SECONDARY
COMPACT COOLED M. PROCESS
PL-20322
COMPACT COOLED 250-320A Digital

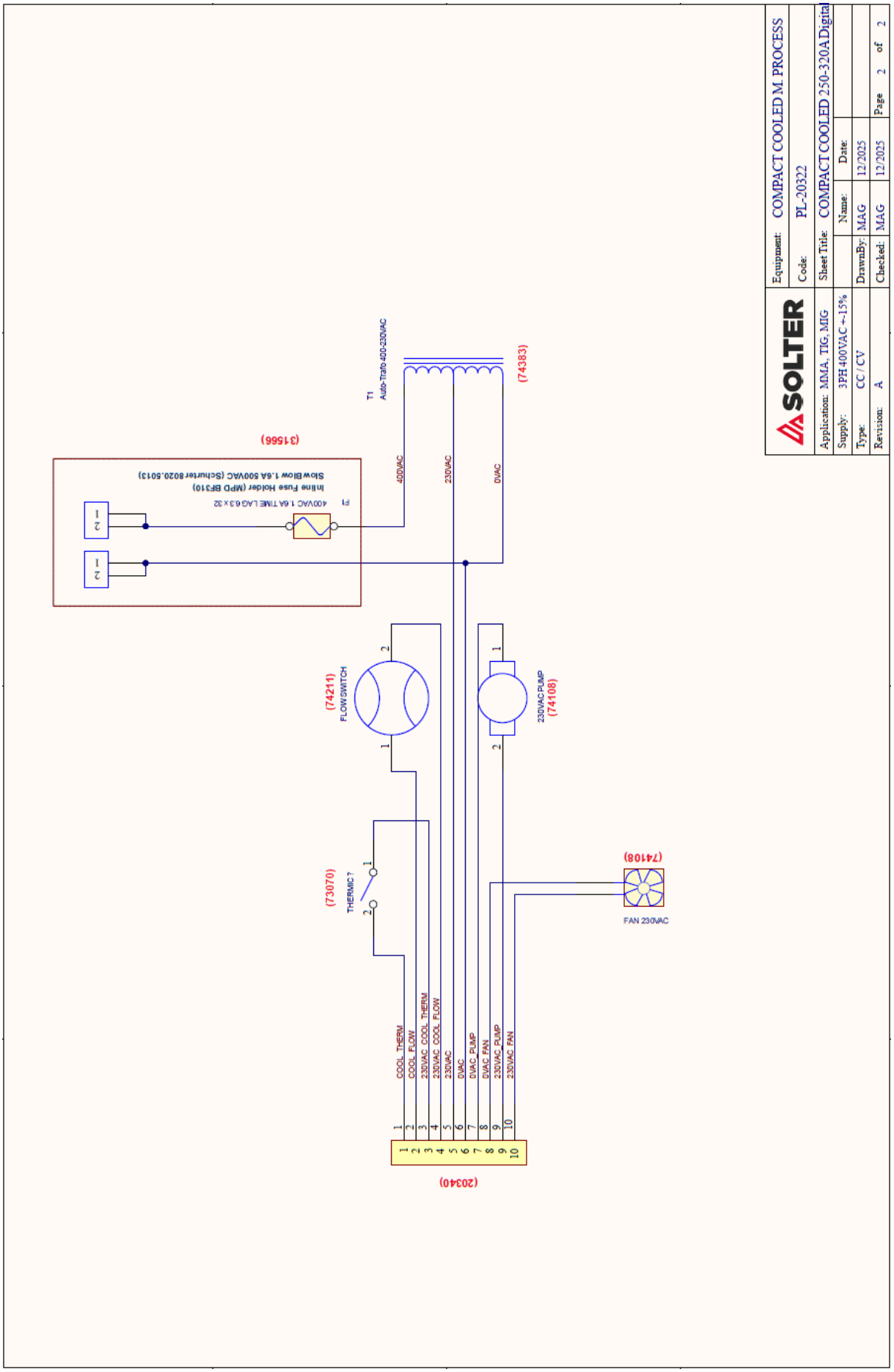
SOLTER
Equipment: COMPACT COOLED M. PROCESS
Code: PL-20322
Sheet Title: COMPACT COOLED 250-320A Digital
Application: MMA, TIG, MIG
Supply: 3PH 400VAC +-15%
Type: CC / CV
Revision: A
Name:
Date:
DrawnBy: MAG 12/2025
Checked: MAG 12/2025
Page 2 of 2
T1
Auto-Trafo 400-230VAC
(74383)
400VAC
230VAC
0VAC
(31566)
Inline Fuse Holder (MPD BF310)
Slow Blow 1.6A 500VAC (Schurter 8020.5013)
F1
400VAC 1.6A TIME LAG 6.3 x 32
(74211)
FLOW SWITCH
230VAC PUMP
(74108)
(73070)
THERMIC ?
(74108)
FAN 230VAC
COOL_THERM
COOL_FLOW
230VAC_COOL_THERM
230VAC_COOL_FLOW
230VAC
0VAC
0VAC_PUMP
0VAC_FAN
230VAC_PUMP
230VAC_FAN
(20340)

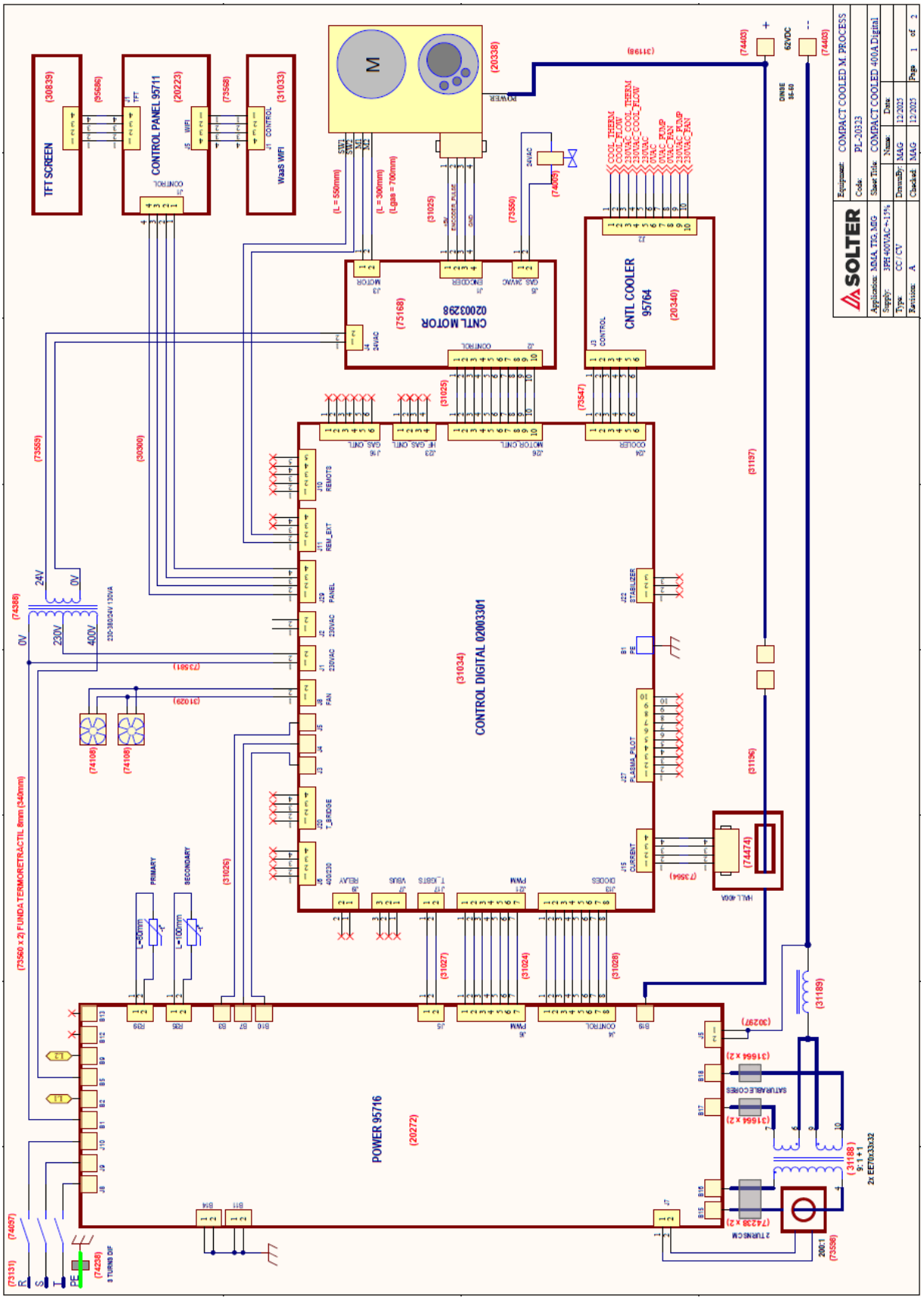
TFT SCREEN
CONTROL PANEL 95711
WaaS WIFI
CNTL MOTOR 02003298
CNTL COOLER 95764
CONTROL DIGITAL 02003301
POWER 95716
SATURABLE CORES
2 TURNS CM
HALL 400A
COMPACT COOLED M. PROCESS
PL-20323
COMPACT COOLED 400A Digital

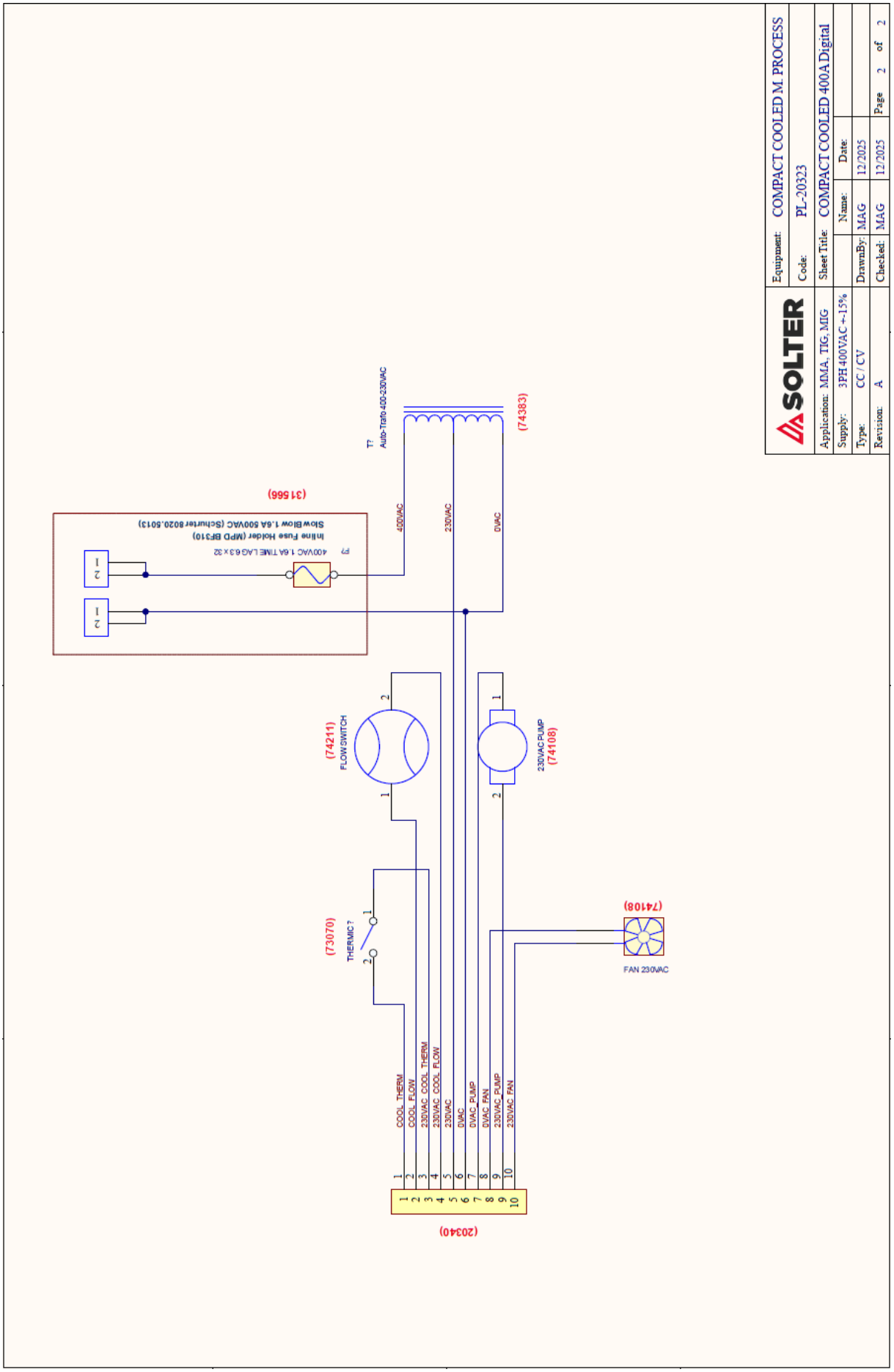
SOLTER
Equipment: COMPACT COOLED M. PROCESS
Code: PL-20323
Sheet Title: COMPACT COOLED 400A Digital
Application: MMA, TIG, MIG
Supply: 3PH 400VAC +-15%
Type: CC / CV
Revision: A
Name:
Date:
DrawnBy: MAG 12/2025
Checked: MAG 12/2025
Page 2 of 2
T?
Auto-Trafo 400-230VAC
(74383)
400VAC
230VAC
0VAC
(31566)
F?
400VAC 1.6A TIME LAG 6.3 x 32
Inline Fuse Holder (MPD BF310)
Slow Blow 1.6A 500VAC (Schurter 8020.5013)
(74211)
FLOW SWITCH
230VAC PUMP
(74108)
(73070)
THERMIC?
(74108)
FAN 230VAC
COOL_THERM
COOL_FLOW
230VAC_COOL_THERM
230VAC_COOL_FLOW
230VAC
0VAC_PUMP
0VAC_FAN
230VAC_PUMP
230VAC_FAN
(20340)

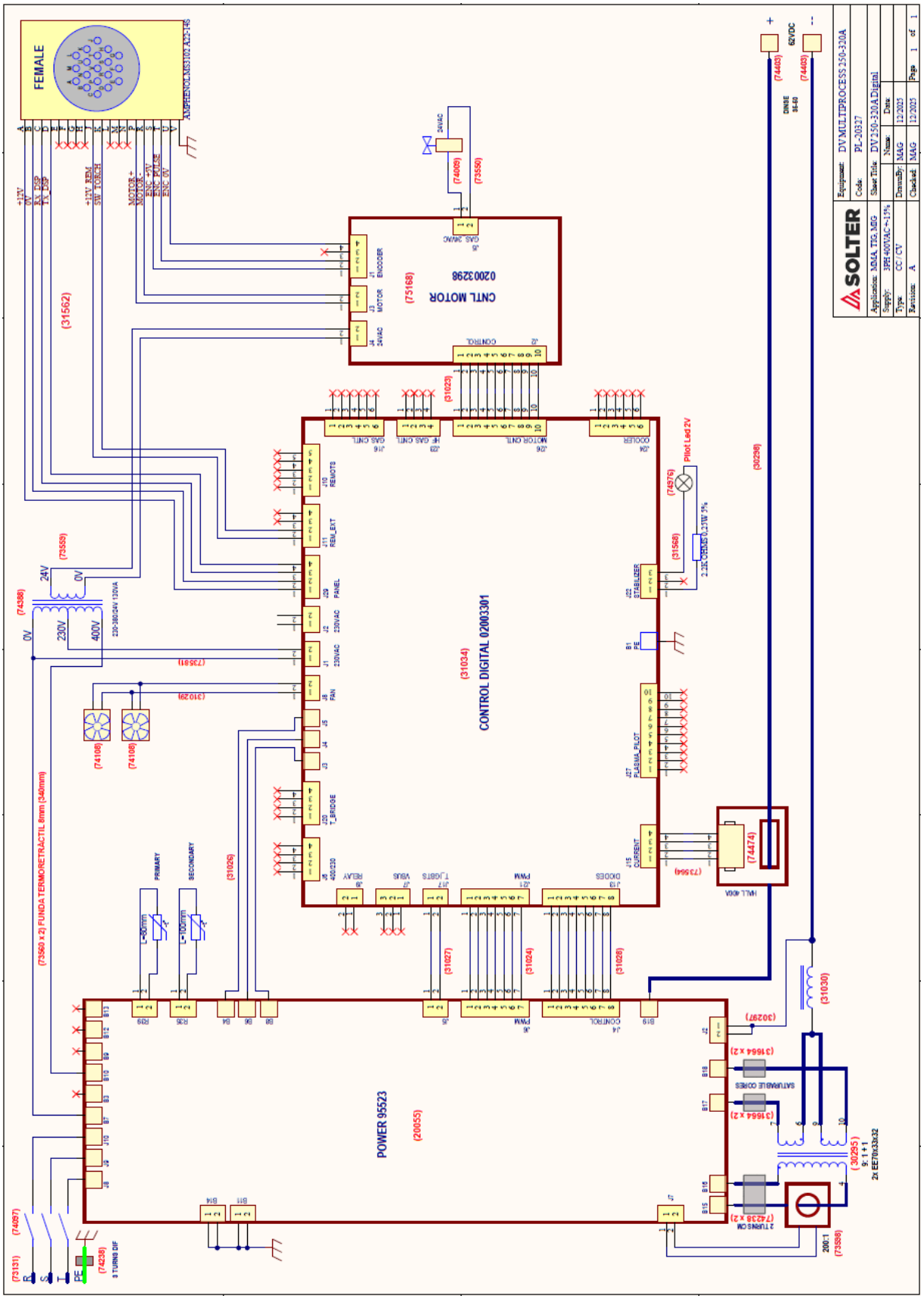
FEMALE
CNTL MOTOR
02003298
(75168)
CONTROL DIGITAL 02003301
(31034)
POWER 95523
(20055)
(31562)
(73560 x 2) FUNDA TERMORETRÁCTIL 8mm (340mm)
SATURABLE CORES
HALL 400A
Pilot Led 2V
Equipment: DV MULTIPROCESS 250-320A
Code: PL-20327
Sheet Title: DV 250-320A Digital
Application: MMA, TIG, MIG
Supply: 3PH 400VAC +-15%
Type: CC / CV
Revision: A
Drawn By: MAG
Checked: MAG
Date: 12/2025
Page 1 of 1

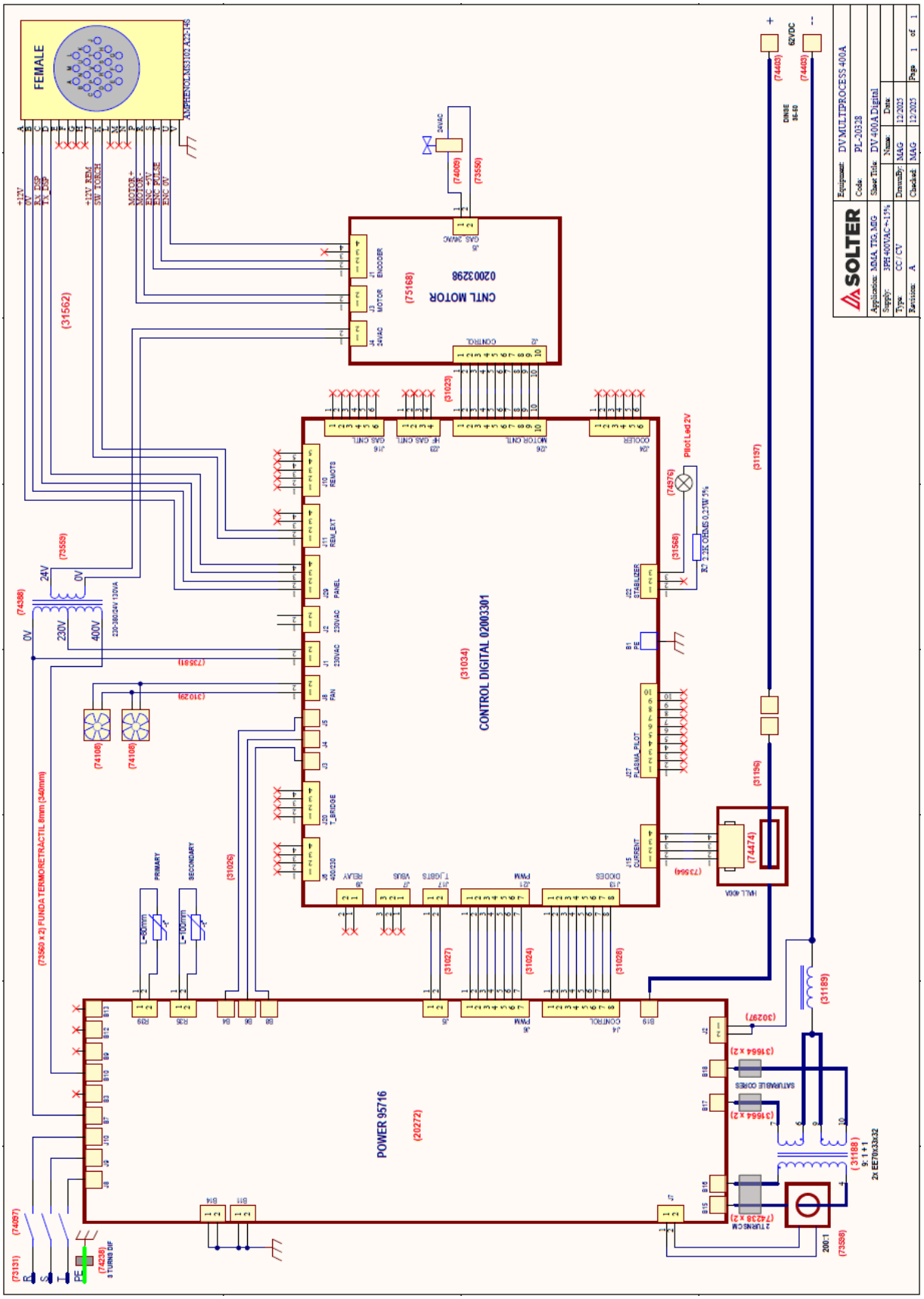
FEMALE
CNTL MOTOR
02003298
(75168)
CONTROL DIGITAL 02003301
(31034)
POWER 95716
(20272)
(31562)
(73560 x 2) FUNDA TERMORETRÁCTIL 8mm (340mm)
Equipment: DV MULTIPROCESS 400A
Code: PL-20328
Sheet Title: DV 400A Digital
Application: MMA, TIG, MIG
Supply: 3PH 400VAC +-15%
Type: CC / CV
Revision: A
Drawn By: MAG
Checked: MAG
Date: 12/2025
Page 1 of 1

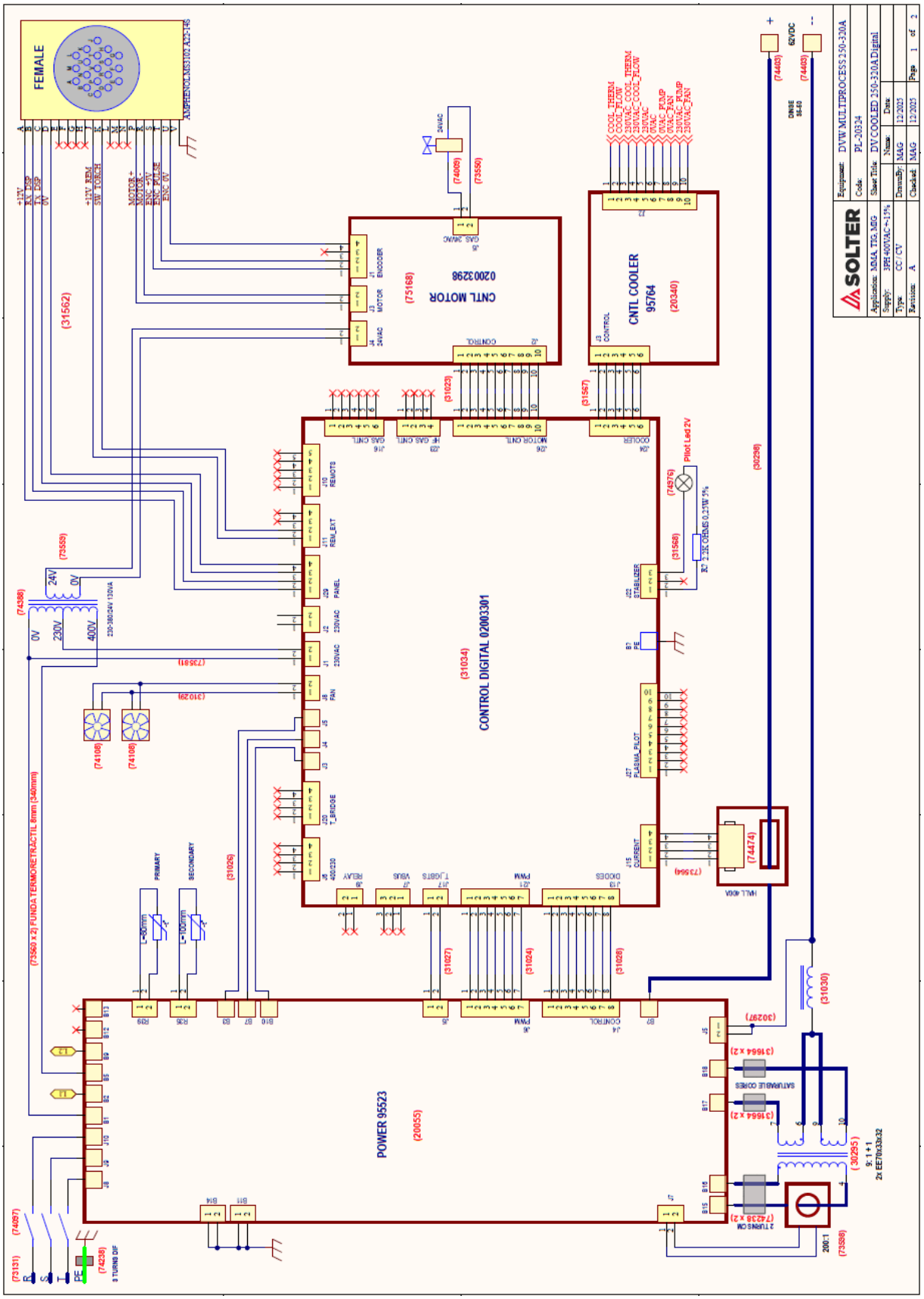
FEMALE
CONTROL DIGITAL 02003301
(31034)
POWER 95523
(20055)
CNTL MOTOR
02003298
(75168)
CNTL COOLER
95764
(20340)
(31562)
SOLTER
Equipment: DVW MULTIPROCESS 250-330A
Code: PE-20324
Sheet Title: DV COOLED 250-330A Digital
Application: MMA TIG MIG
Supply: 3PH 400VAC +-15%
Type: CC/CV
Remarks: A
Name
Date
Drawn By: MAG 12/2025
Checked: MAG 12/2025
Page 1 of 2

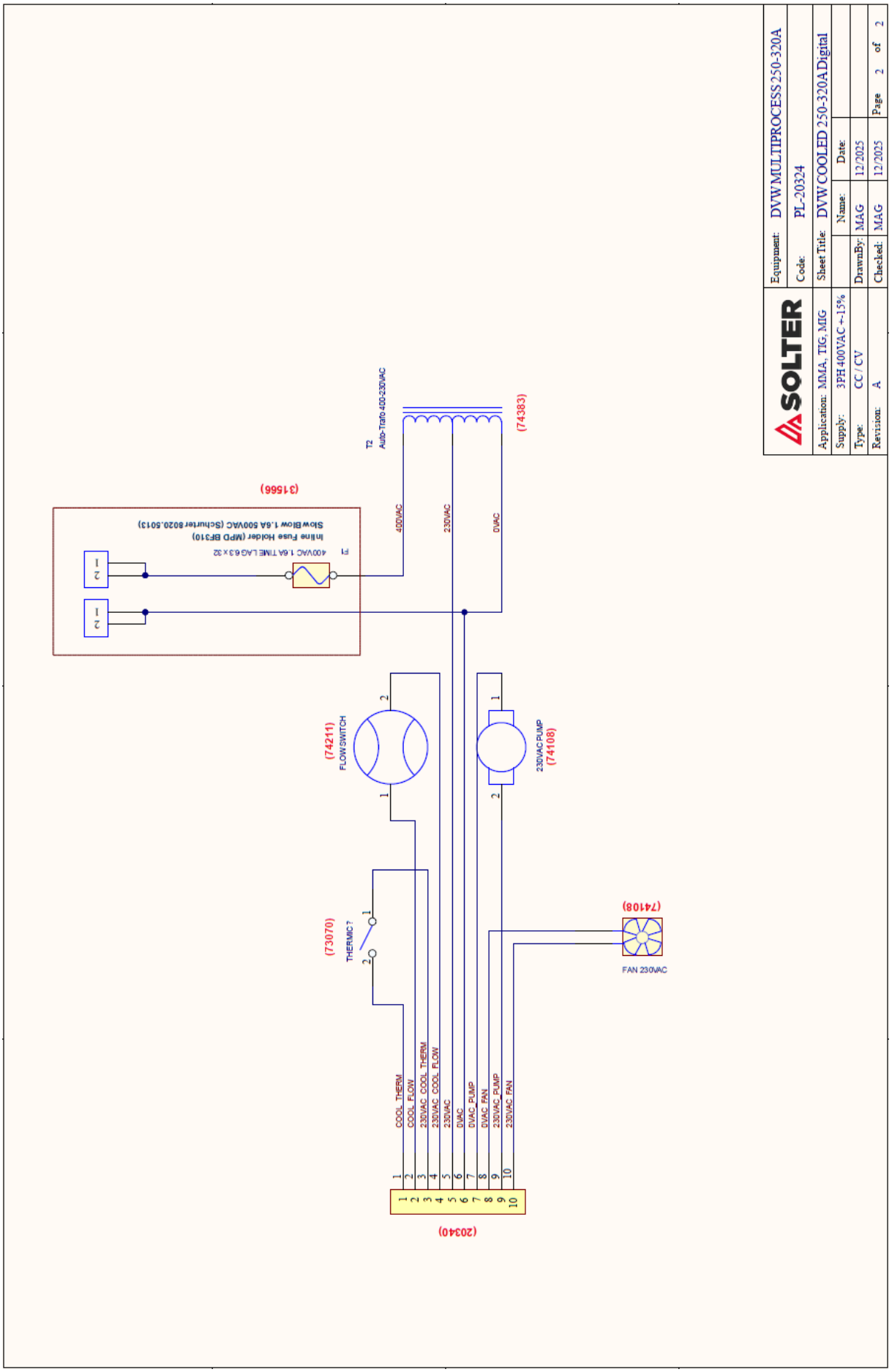
SOLTER
Equipment: DVW MULTIPROCESS 250-320A
Code: PL-20324
Sheet Title: DVW COOLED 250-320A Digital
Application: MMA, TIG, MIG
Supply: 3PH 400VAC +-15%
Type: CC / CV
Revision: A
Name:
Date:
DrawnBy: MAG 12/2025
Checked: MAG 12/2025
Page 2 of 2
T2
Auto-Trafo 400-230VAC
(74383)
400VAC
230VAC
0VAC
(31566)
F1
400VAC 1.6A TIME LAG 6.3 x 32
Inline Fuse Holder (MPD BF310)
Slow Blow 1.6A 500VAC (Schurter 8020.5013)
(74211)
FLOW SWITCH
230VAC PUMP
(74108)
(73070)
THERMIC ?
(74108)
FAN 230VAC
(20340)
COOL_THERM
COOL_FLOW
230VAC_COOL_THERM
230VAC_COOL_FLOW
230VAC
0VAC
0VAC_PUMP
0VAC_FAN
230VAC_PUMP
230VAC_FAN

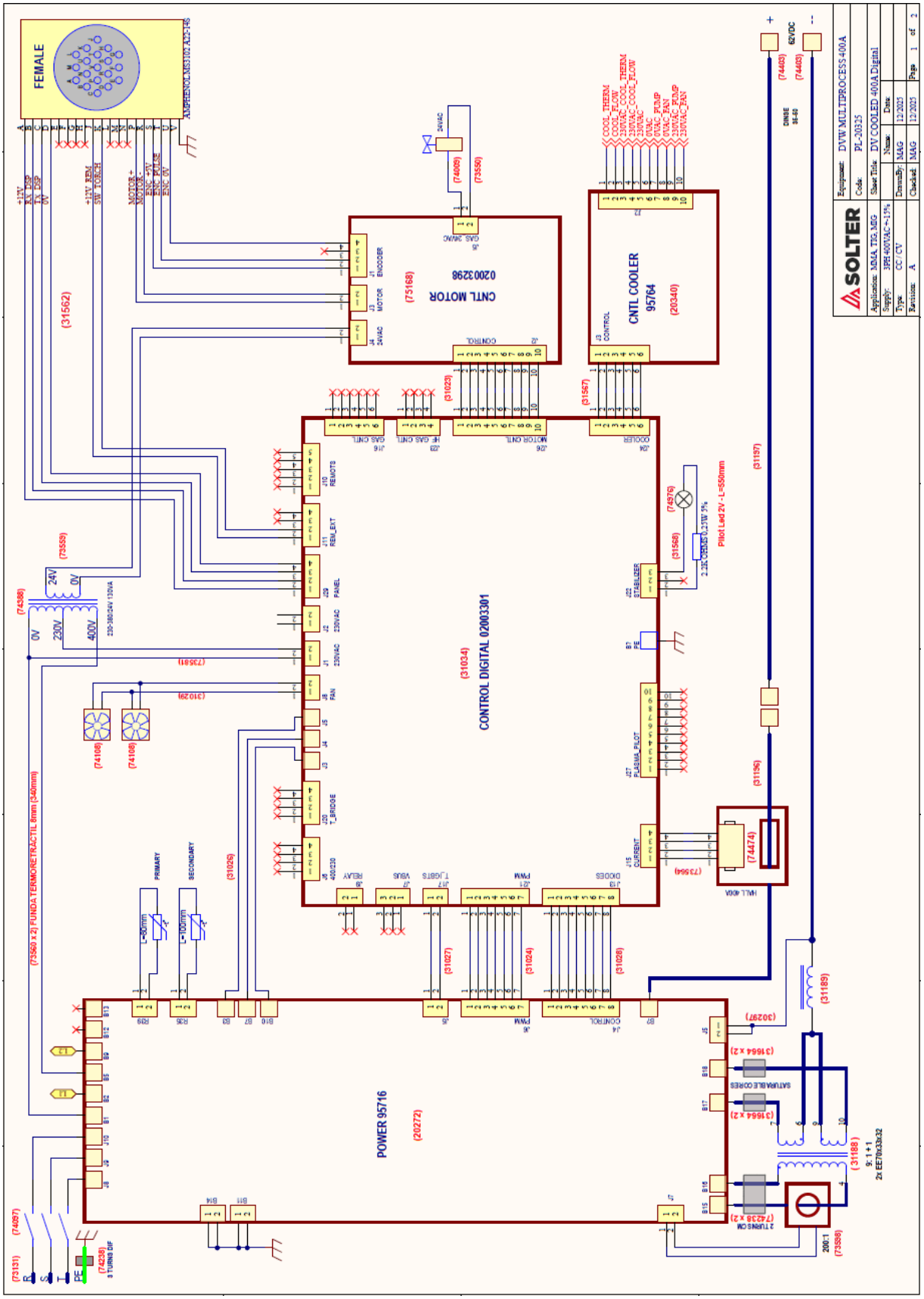
FEMALE
CONTROL DIGITAL 02003301
(31034)
POWER 95716
(20272)
CNTL MOTOR
02003298
(75168)
CNTL COOLER
95764
(20340)
SOLTER
Equipment: DVW MULTIPROCESS 400A
Code: PL-20325
Application: MMA TIG MIG
Slave Title: DV COOLED 400A Digital
Supply: 3PH 400VAC~15%
Type: CC/ CV
Revision: A
Name
Date
Drawn By: MAG 12/2025
Checked: MAG 12/2025
Page 1 of 2

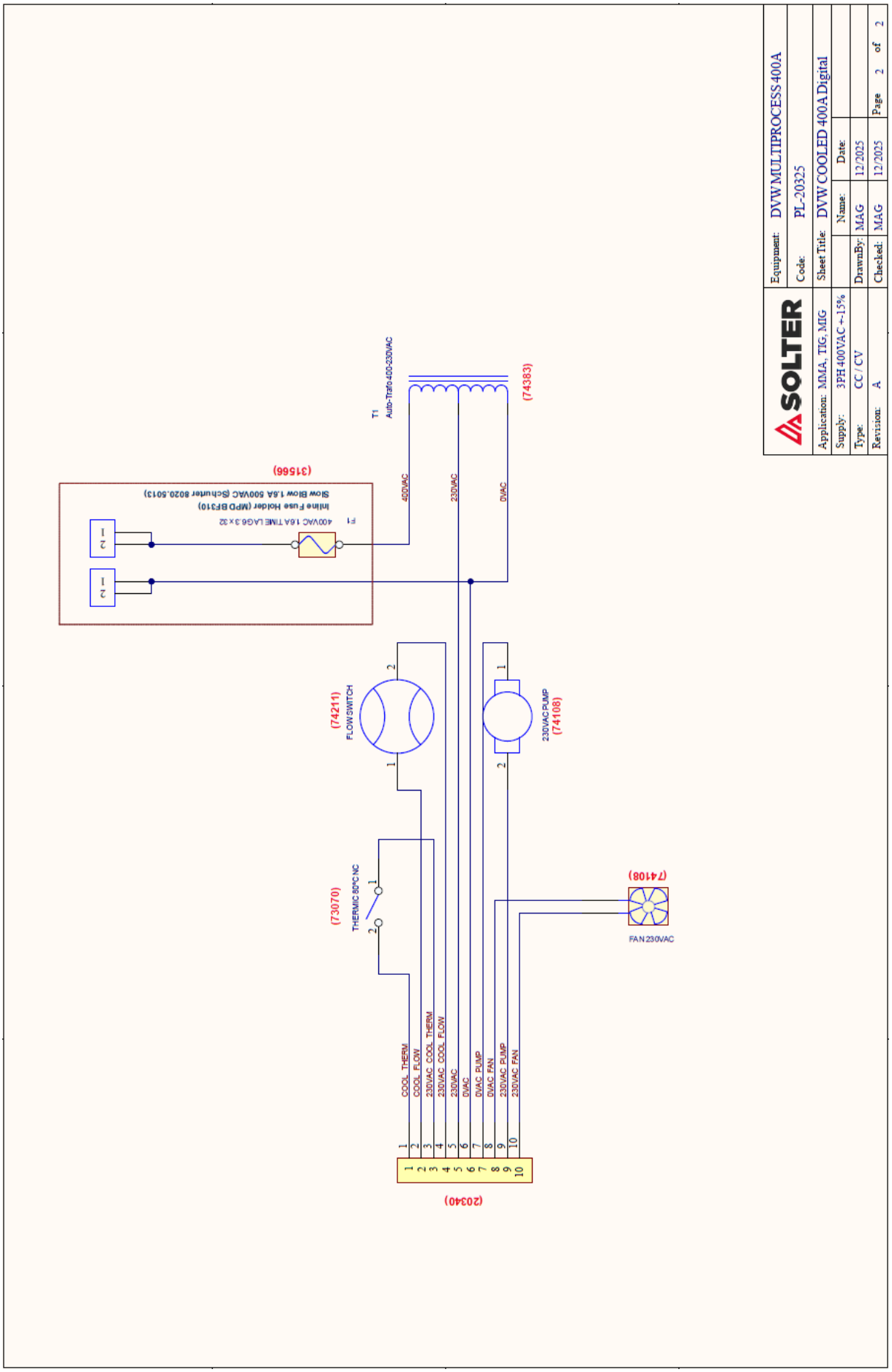
SOLTER
Equipment: DVW MULTIPROCESS 400A
Code: PL-20325
Sheet Title: DVW COOLED 400A Digital
Application: MMA, TIG, MIG
Supply: 3PH 400VAC +-15%
Type: CC / CV
Revision: A
Name:
Date:
DrawnBy: MAG 12/2025
Checked: MAG 12/2025
Page 2 of 2
T1
Auto-Trafo 400-230VAC
(74383)
400VAC
230VAC
0VAC
(31566)
Inline Fuse Holder (MPD BF310)
Slow Blow 1.6A 500VAC (Schurter 8020.5013)
F1
400VAC 1.6A TIME 5X20 3 x 32
(74211)
FLOW SWITCH
230VAC PUMP
(74108)
(73070)
THERMIC 85°C NC
(74108)
FAN 230VAC
(20340)
COOL THERM
COOL FLOW
230VAC COOL THERM
230VAC COOL FLOW
230VAC
0VAC
0VAC PUMP
0VAC FAN
230VAC PUMP
230VAC FAN

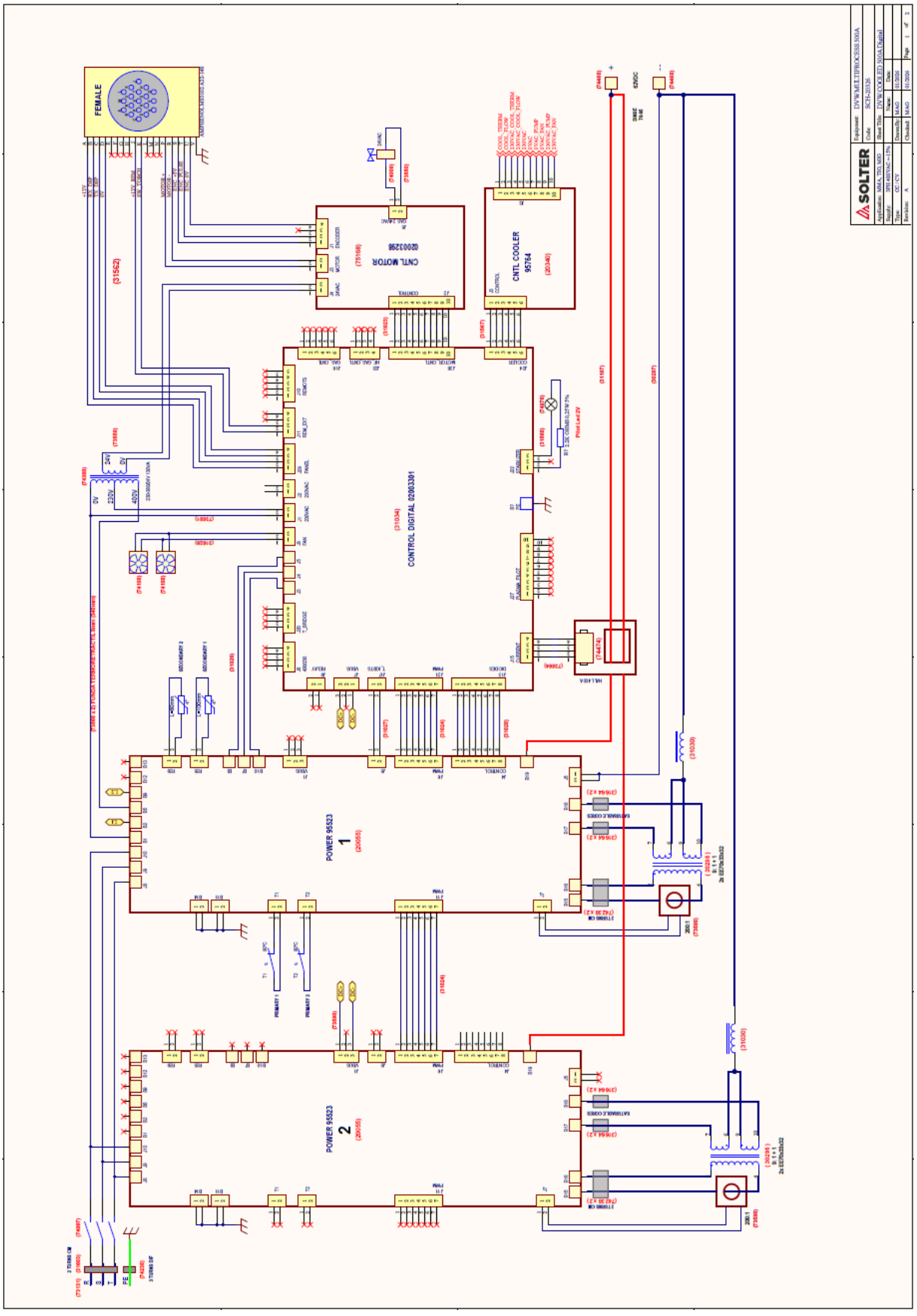
FEMALE
CNTL MOTOR
02003298
CNTL COOLER
95764
CONTROL DIGITAL 02003301
POWER 95523
1
POWER 95523
2
SOLTER
Equipment: DVW MULTIPROCESS 500A
Code: SCH-20326
Application: MMA, TIG, MIG
Supply: 3PH 400VAC ~15%
Type: CC / CV
Revision: A
Sheet Title: DVW COOLED 500A Digital
Name: Date:
Drawn By: M.A.G 01/2006
Checked: M.A.G 01/2006
Page 1 of 2

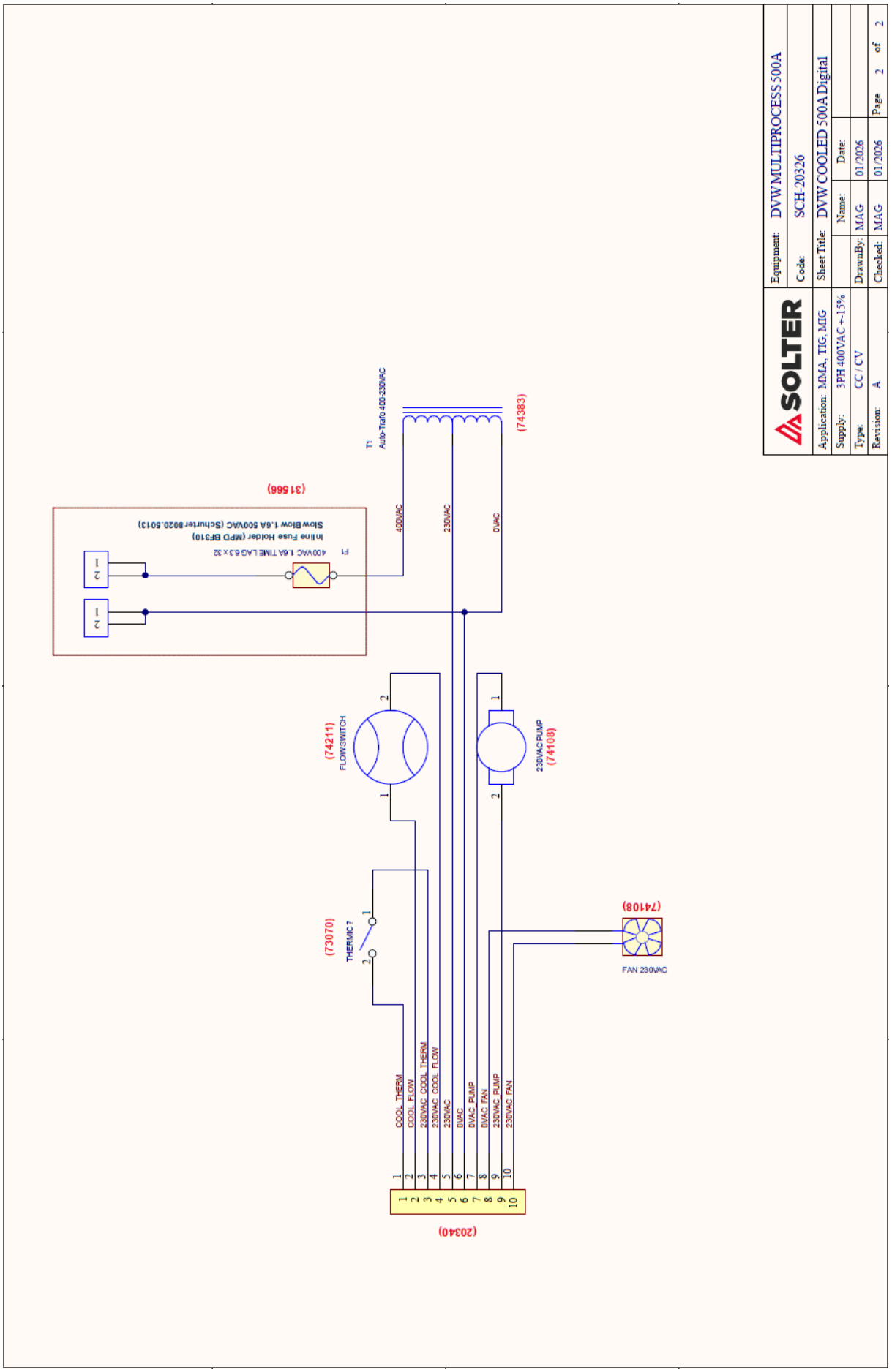
SOLTER
Equipment: DVW MULTIPROCESS 500A
Code: SCH-20326
Sheet Title: DVW COOLED 500A Digital
Application: MMA, TIG, MIG
Supply: 3PH 400VAC +-15%
Type: CC / CV
Revision: A
Name:
Date:
DrawnBy: MAG 01/2026
Checked: MAG 01/2026
Page 2 of 2
T1
Auto-Trafo 400-230VAC
(74383)
400VAC
230VAC
0VAC
(31566)
Inline Fuse Holder (MPD BF310)
Slow Blow 1.6A 500VAC (Schurter 8020.5013)
F1
400VAC 1.6A TIME LAG 6.3 x 32
(74211)
FLOW SWITCH
230VAC PUMP
(74108)
(73070)
THERMIC ?
FAN 230VAC
(74108)
COOL_THERM
COOL_FLOW
230VAC_COOL_THERM
230VAC_COOL_FLOW
230VAC
0VAC
0VAC_PUMP
0VAC_FAN
230VAC_PUMP
230VAC_FAN
(20340)

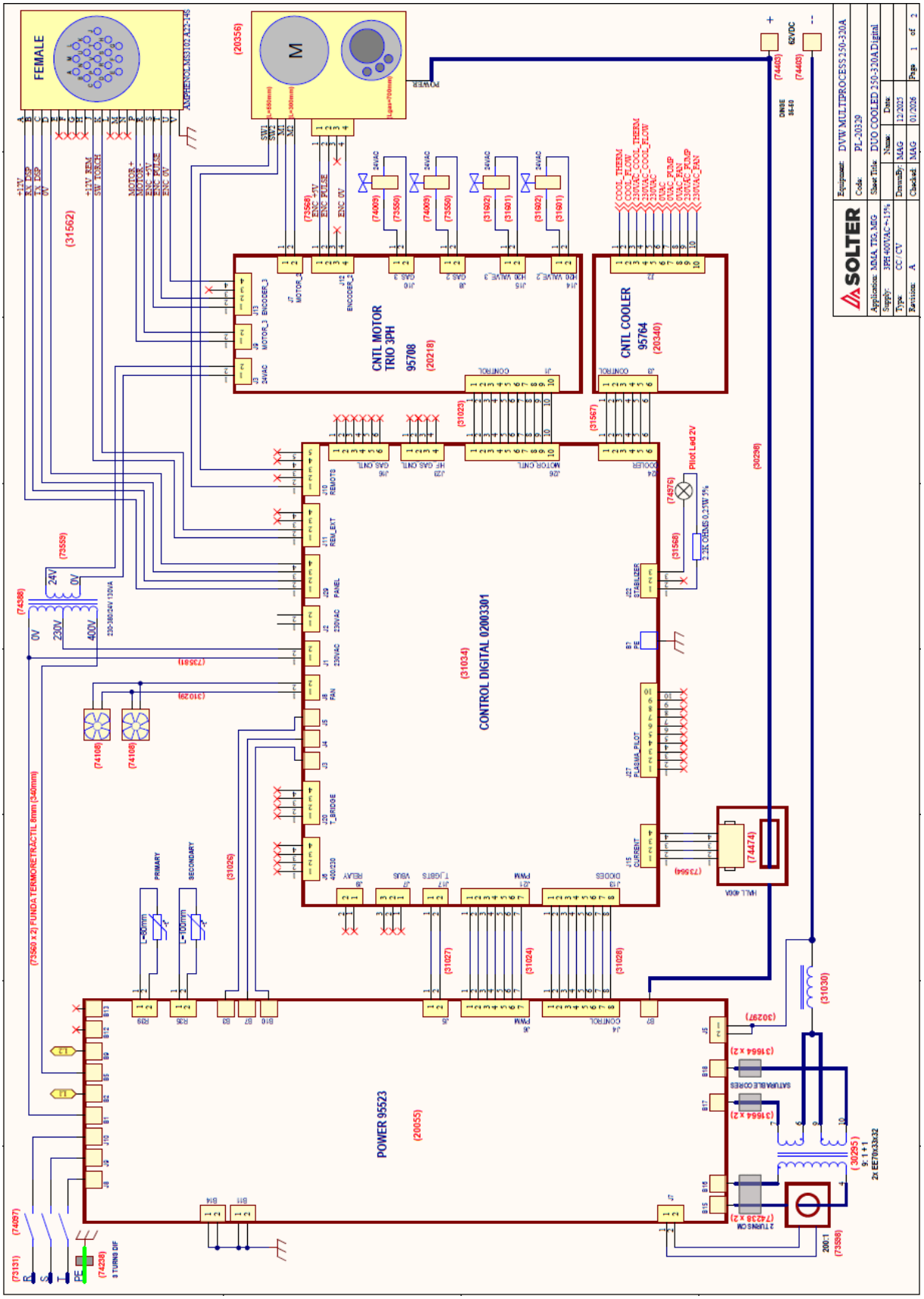
FEMALE
CNTL MOTOR
TRIO 3PH
95708
(20218)
CNTL COOLER
95764
(20340)
CONTROL DIGITAL 02003301
(31034)
POWER 95523
(20055)
Equipment: DVW MULTIPROCESS 250-320A
Code: PL-20329
Sheet Title: DUO COOLED 250-320A Digital
Application: MMA, TIG, MIG
Supply: 3PH 400VAC +-15%
Type: CC / CV
Revision: A
Drawn By: MAG
Checked: MAG
Name:
Date:
12/2025
01/2026
Page 1 of 2

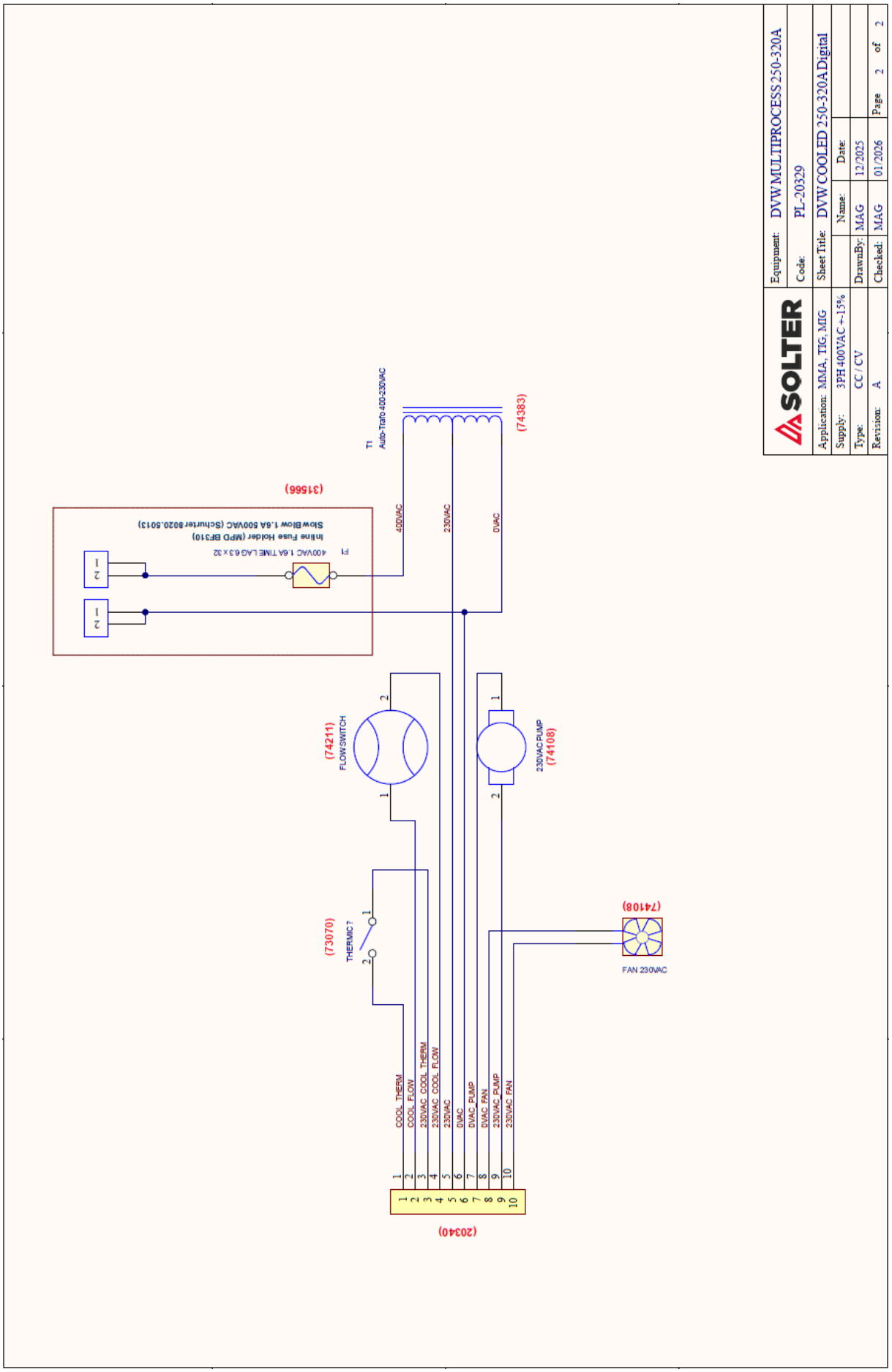
SOLTER
Equipment: DVW MULTIPROCESS 250-320A
Code: PL-20329
Sheet Title: DVW COOLED 250-320A Digital
Application: MMA, TIG, MIG
Supply: 3PH 400VAC +-15%
Type: CC / CV
Revision: A
Name:
Date:
DrawnBy: MAG 12/2025
Checked: MAG 01/2026
Page 2 of 2
T1
Auto-Trafo 400-230VAC
(74383)
400VAC
230VAC
0VAC
(31566)
F1
400VAC 1.6A TIME LAG 6.3 x 32
Inline Fuse Holder (MPD BF310)
Slow Blow 1.6A 500VAC (Schurter 8020.5013)
(74211)
FLOW SWITCH
230VAC PUMP
(74108)
(73070)
THERMIC ?
FAN 230VAC
(74108)
(20340)
COOL_THERM
COOL_FLOW
230VAC_COOL_THERM
230VAC_COOL_FLOW
230VAC
0VAC
0VAC_PUMP
0VAC_FAN
230VAC_PUMP
230VAC_FAN

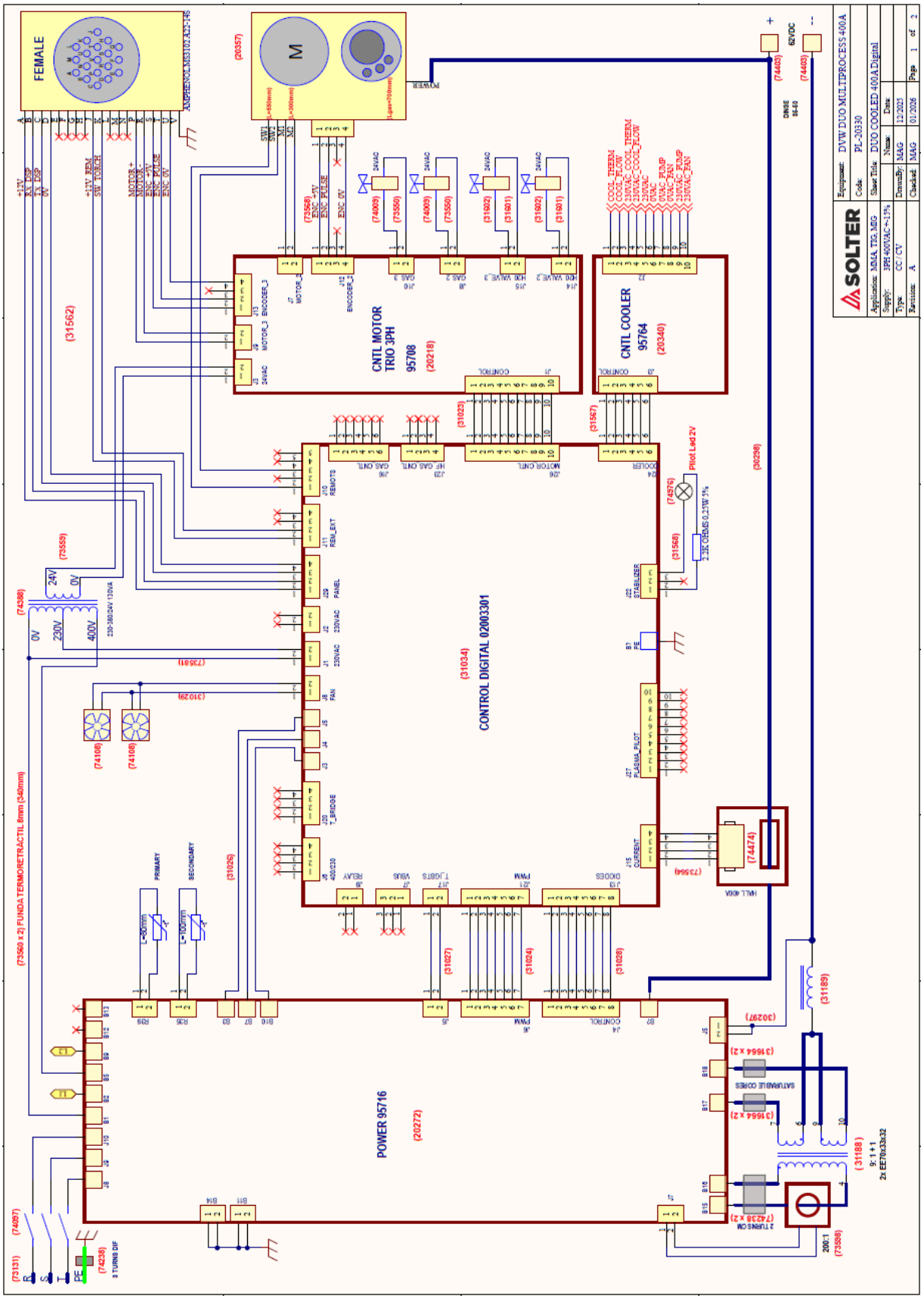
FEMALE
CNTL MOTOR
TRIO 3PH
95708
(20218)
CNTL COOLER
95764
(20340)
CONTROL DIGITAL 02003301
(31034)
POWER 95716
(20272)
SOLTER
Equipment: DVW DUO MULTIPROCESS 400A
Code: PL-20330
Sheet Title: DUO COOLED 400A Digital
Application: MMA, TIG, MIG
Supply: 3PH 400VAC +-15%
Type: CC/CV
Revision: A
DrawnBy: MAG
Name:
Checked: MAG
Date
12/2025
01/2026
Page 1 of 2

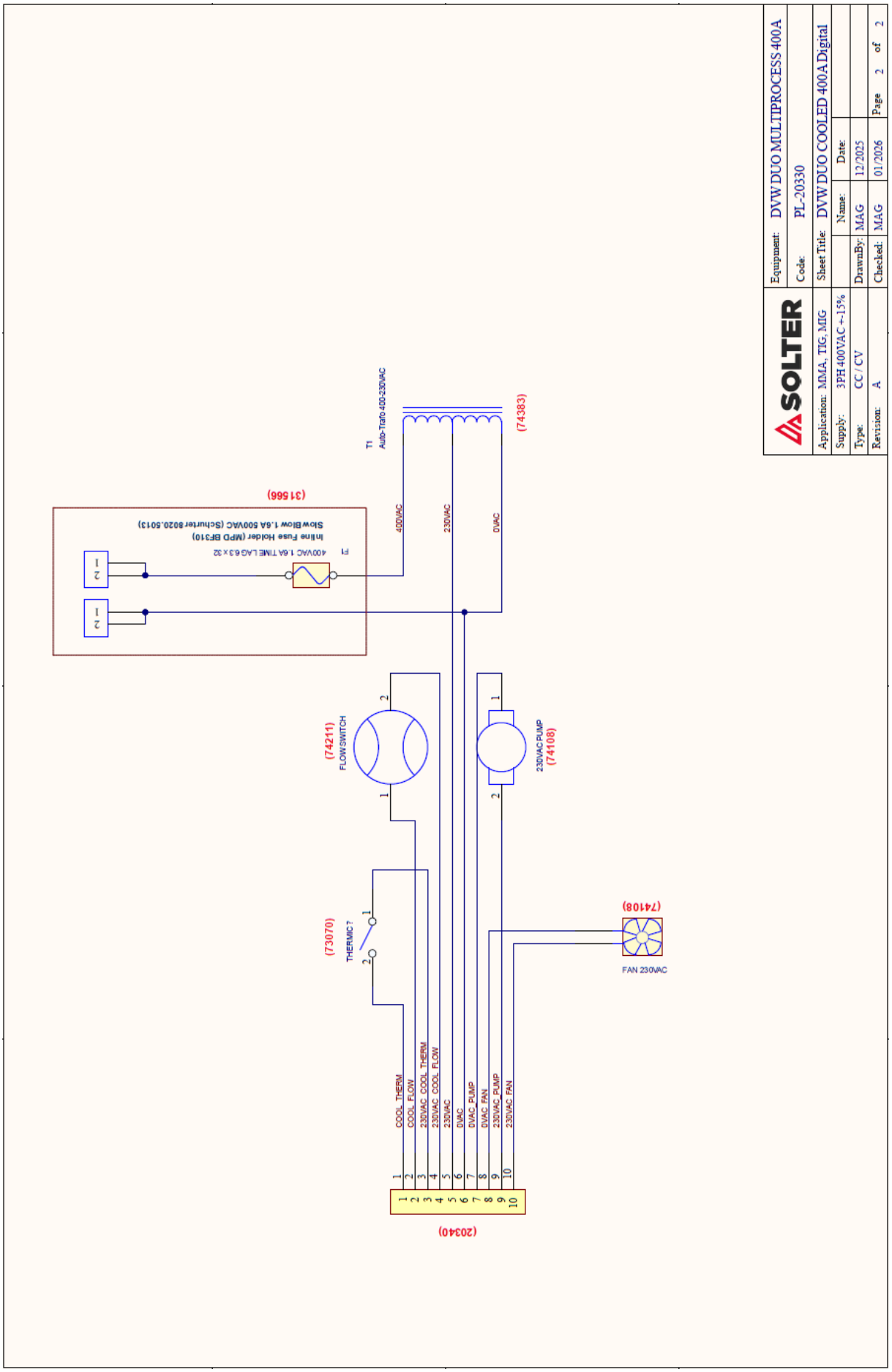
SOLTER
Equipment: DVW DUO MULTIPROCESS 400A
Code: PL-20330
Sheet Title: DVW DUO COOLED 400A Digital
Application: MMA, TIG, MIG
Supply: 3PH 400VAC +-15%
Type: CC / CV
Revision: A
Name:
Date:
DrawnBy: MAG 12/2025
Checked: MAG 01/2026
Page 2 of 2
T1
Auto-Trafo 400-230VAC
(74383)
400VAC
230VAC
0VAC
(31566)
F1
400VAC 1.6A TIME LAG 6.3 x 32
Inline Fuse Holder (MPD BF310)
Slow Blow 1.6A 500VAC (Schurter 8020.5013)
(74211)
FLOW SWITCH
230VAC PUMP
(74108)
(73070)
THERMIC ?
FAN 230VAC
(74108)
(20340)
COOL_THERM
COOL_FLOW
230VAC_COOL_THERM
230VAC_COOL_FLOW
230VAC
0VAC
0VAC_PUMP
0VAC_FAN
230VAC_PUMP
230VAC_FAN

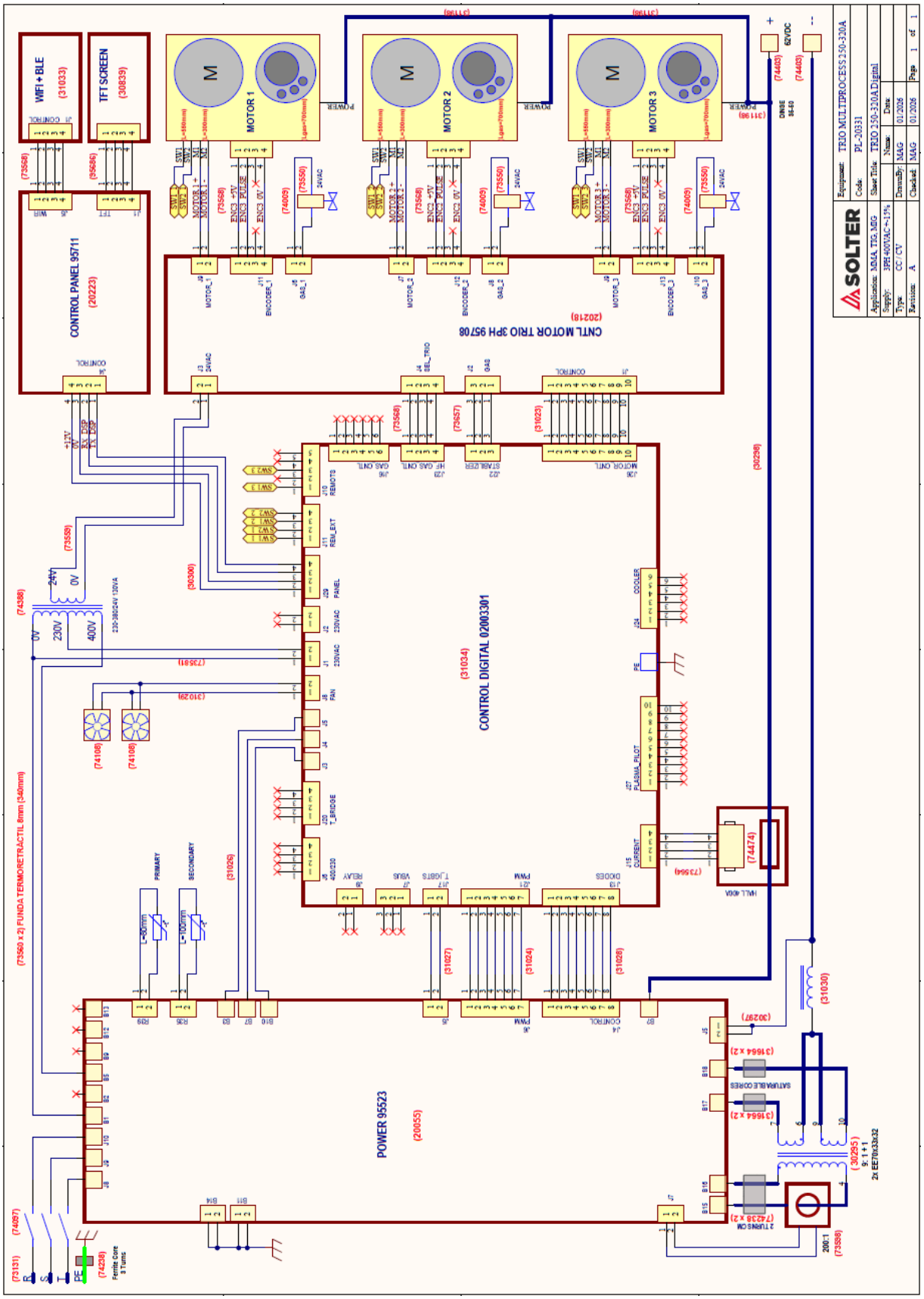
WIFI + BLE
(31033)
TFT SCREEN
(30839)
CONTROL PANEL 95711
(20223)
MOTOR 1
MOTOR 2
MOTOR 3
CNTL MOTOR TRIO 3PH 95708
(20218)
CONTROL DIGITAL 02003301
(31034)
POWER 95523
(20055)
(73560 x 2) FUNDA TERMORETRÁCTIL 8mm (340mm)
SOLTER
Equipment: TRIO MULTIPROCESS 250-320A
Code: PL-20331
Sheet Title: TRIO 250-320A Digital
Application: MMA, TIG, MIG
Supply: 3PH 400VAC +-15%
Type: CC / CV
Revision: A
Name: MAG
Date: 01/2026
Drawn By: MAG
Checked: MAG
Page 1 of 1

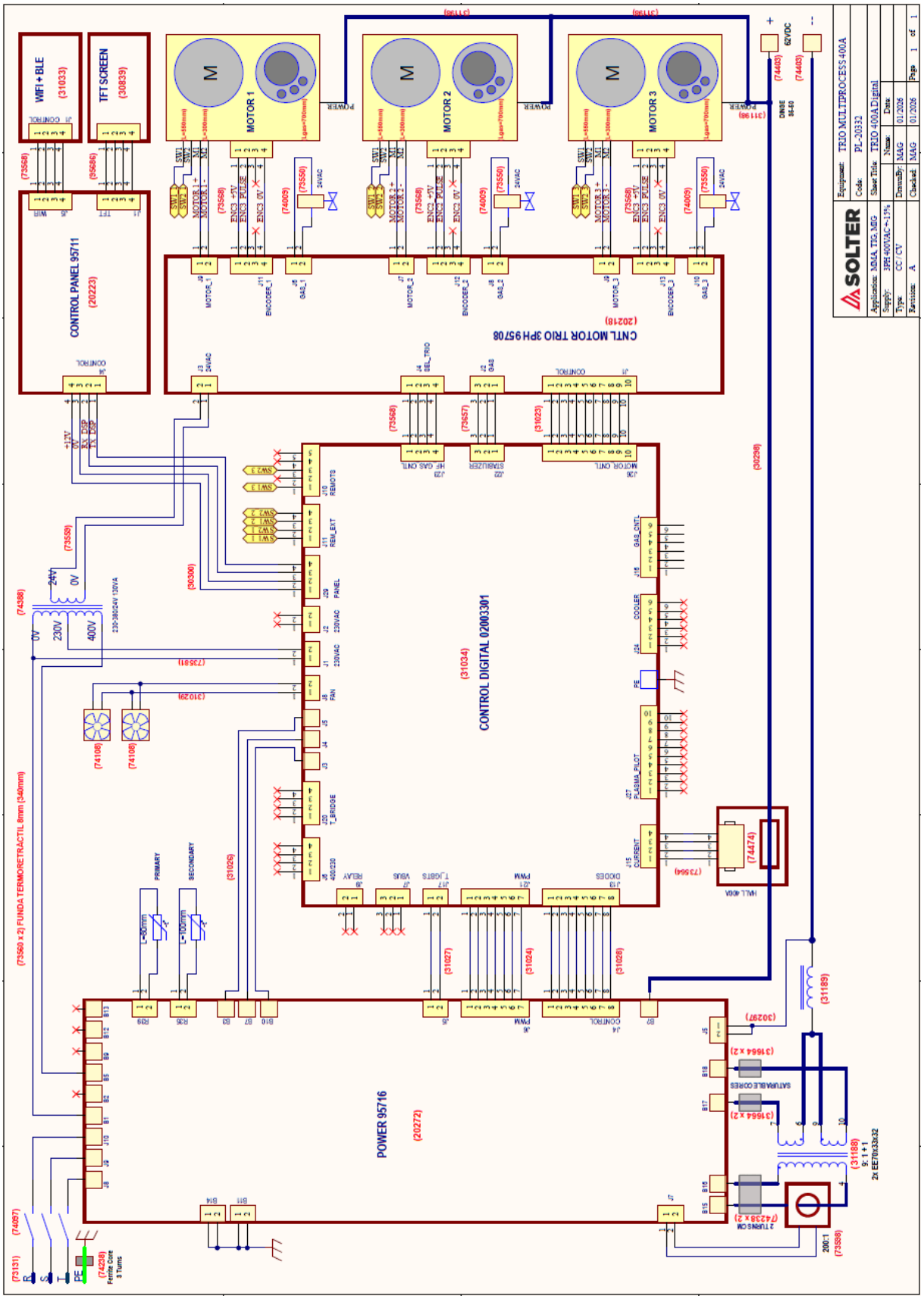
WIFI + BLE (31033)
TFT SCREEN (30839)
CONTROL PANEL 95711 (20223)
MOTOR 1
MOTOR 2
MOTOR 3
CNTL MOTOR TRIO 3PH 95708 (20218)
CONTROL DIGITAL 02003301 (31034)
POWER 95716 (20272)
Equipment: TRIO MULTIPROCESS 400A
Code: PL-20332
Sheet Title: TRIO 400A Digital
Application: MMA, TIG, MIG
Supply: 3PH 400VAC +-15%
Type: CC/ CV
Revision: A
Drawn By: MAG
Checked: MAG
Date: 01/2026
Page 1 of 1

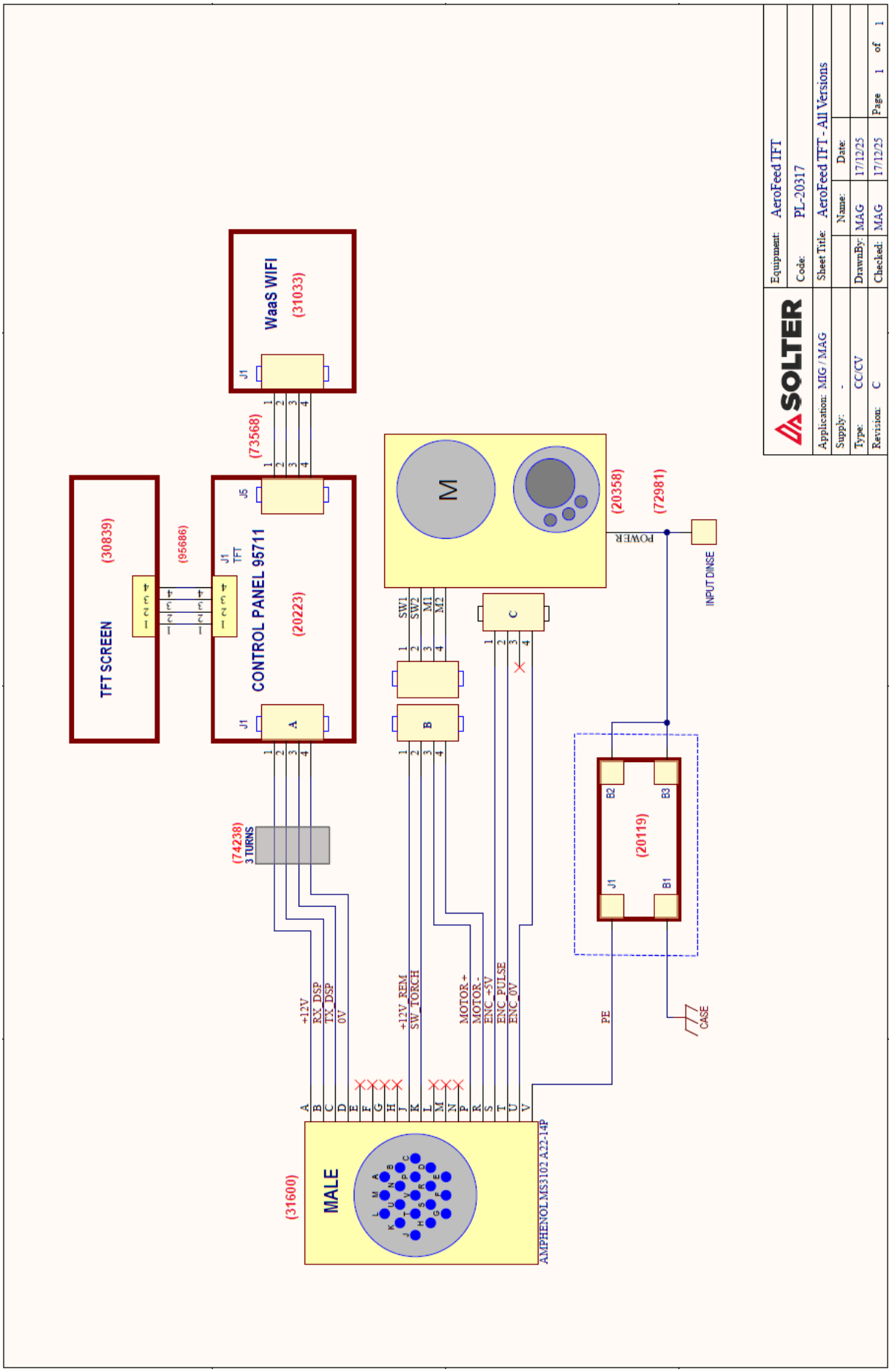
SOLTER
Equipment: AeroFeed TFT
Code: PL-20317
Sheet Title: AeroFeed TFT - All Versions
Application: MIG / MAG
Supply: -
Type: CC/CV
Revision: C
Name:
Date:
DrawnBy: MAG 17/12/25
Checked: MAG 17/12/25
Page 1 of 1
WaaS WIFI (31033)
(73568)
CONTROL PANEL 95711 (20223)
TFT SCREEN (30839)
(95686)
(74238) 3 TURNS
(20358)
(72981)
INPUT DINSE
(20119)
(31600)
MALE
AMPHENOL MS3102 A22-14P
+12V
RX_DSP
TX_DSP
0V
+12V_REM
SW_TORCH
MOTOR +
MOTOR -
ENC_+5V
ENC_PULSE
ENC_0V
PE
CASE



SOLTER TECHNICAL SUPPORT

CUSTOMER SERVICE
Email: solter@solter.com

All SOLTER equipment owners, in case of breakdown or technical query, do not hesitate to contact us and our team of professionals will attend to your queries immediately.



WARRANTY INFORMATION

We offer a limited warranty for this product against any defects in material and workmanship for a period of 12 months from the date of purchase by the end user/consumer.

The warranty conditions are as follows:

The warranty will only be valid upon presentation of the purchase invoice linked to the equipment's serial number. The purchase date must also be included.

The warranty does not cover defects caused by misuse, incorrect installation, modification, or tampering with the product.

We are not responsible for damage caused by misuse or improper use of the equipment. The warranty is limited to the repair of defective components.

In the event that the product is repaired or replaced, the warranty period will remain valid for the remaining period.

For warranty details outside of Spain, please contact your local distributor.

DECLARATION OF CONFORMITY

SOLTER SOLDADURA, S.L.
NIF: B-17245127
Camí de la Creu, 25
17530 CAMPDEVÀNOL (GIRONA)

SOLTER

The following products are declared:

AEROMIG C 270 / AEROMIG C 270 PULSE
AEROMIG C 300 / AEROMIG C 300 PULSE
AEROMIG C 320 / AEROMIG C 320 PULSE
AEROMIG C 400 / AEROMIG C 400 PULSE

AEROPROCESS P 250 FC / AEROPROCESS P 250 FC PULSE
AEROPROCESS P 270 FC / AEROPROCESS P 270 FC PULSE
AEROPROCESS P 300 FC / AEROPROCESS P 300 FC PULSE
AEROPROCESS P 320 FC / AEROPROCESS P 320 FC PULSE
AEROPROCESS P 400 FC / AEROPROCESS P 400 FC PULSE

AEROPROCESS C 270 / AEROPROCESS C 270 PULSE
AEROPROCESS C 300 / AEROPROCESS C 300 PULSE
AEROPROCESS C 320 / AEROPROCESS C 320 PULSE
AEROPROCESS C 400 / AEROPROCESS C 400 PULSE

AEROPROCESS CW 320 / AEROPROCESS CW 320 PULSE
AEROPROCESS CW 400 / AEROPROCESS CW 400 PULSE

AEROPROCESS DV 320 / AEROPROCESS DV 320 PULSE
AEROPROCESS DV 400 / AEROPROCESS DV 400 PULSE

AEROPROCESS DVW 320 / AEROPROCESS DVW 320 PULSE
AEROPROCESS DVW 400 / AEROPROCESS DVW 400 PULSE

AEROPROCESS DVW 500 / AEROPROCESS DVW 500 PULSE

AEROPROCESS DVW DUO 320 / AEROPROCESS DVW DUO 320 PULSE
AEROPROCESS DVW DUO 400 / AEROPROCESS DVW DUO 400 PULSE

AEROPROCESS C TRIO 320 / AEROPROCESS C TRIO 320 PULSE
AEROPROCESS C TRIO 400 / AEROPROCESS C TRIO 400 PULSE

The entity to which this declaration refers is in compliance with the following standard(s) or normative document(s).

EN-60974-1, EN-60974-5, EN-60974-10 Class A

Following the provisions of the Directive(s)

2014/35/UE (LVD), 2014/30/UE (EMC), 2011/65/UE (ROHS), 2019/1784/UE (EcoD)

Campdevànol, in 07 / 2026